ASSEMBLY INSTRUCTION

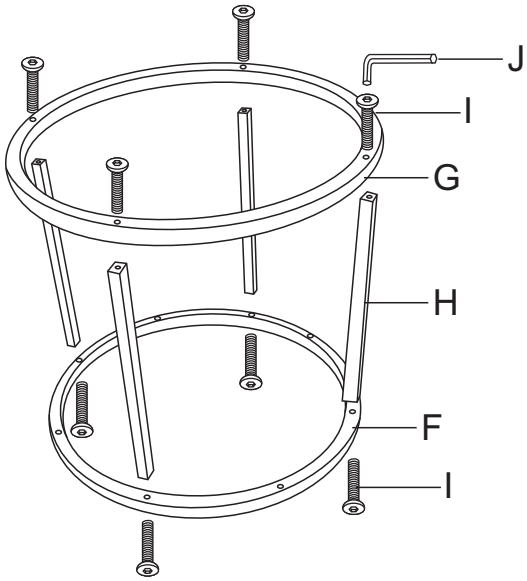

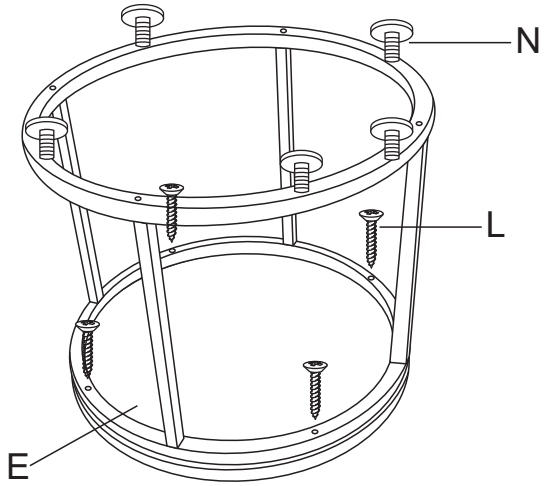

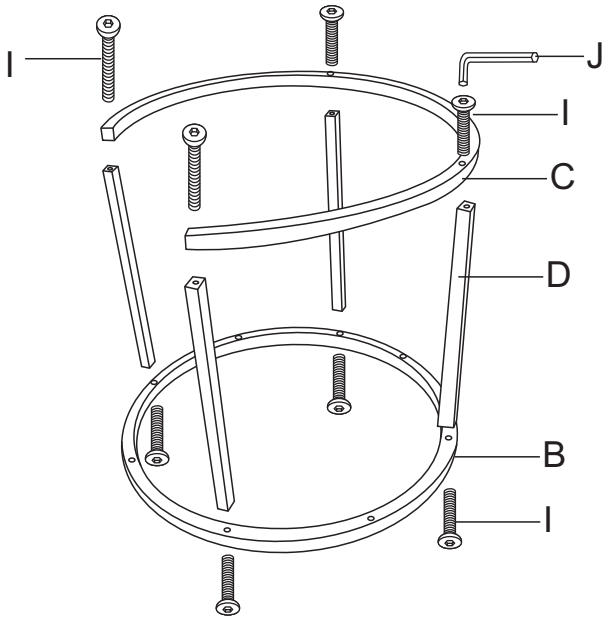

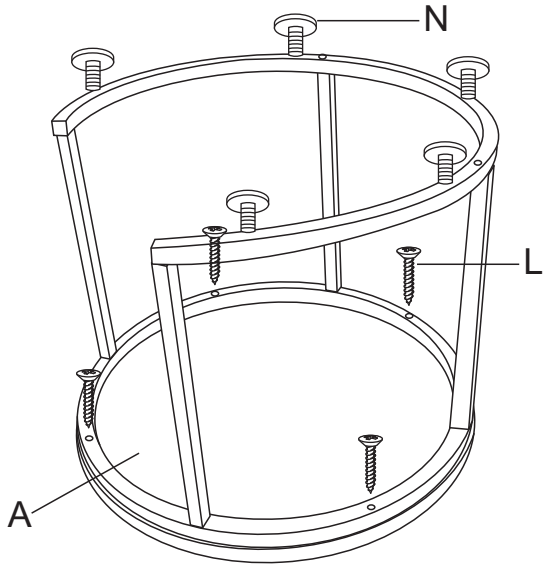

Ax1	Bx1	Cx1	Dx4
	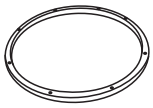		
Ex1	**Fx1**	**Gx1**	**Hx4**

Ix16	Jx1	Lx8	Nx10		