Anni T

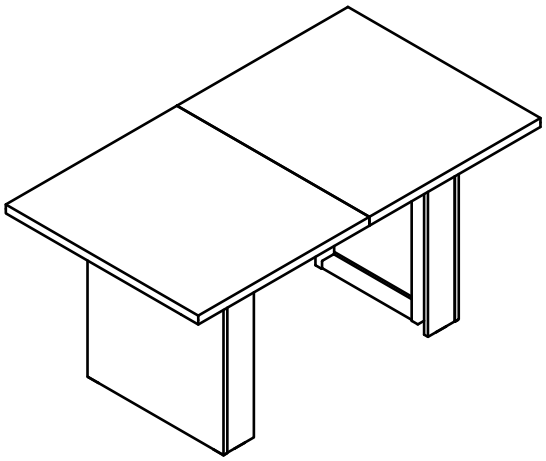

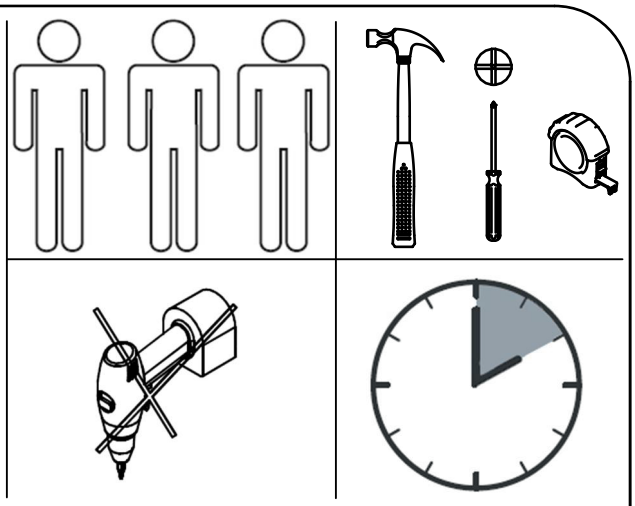

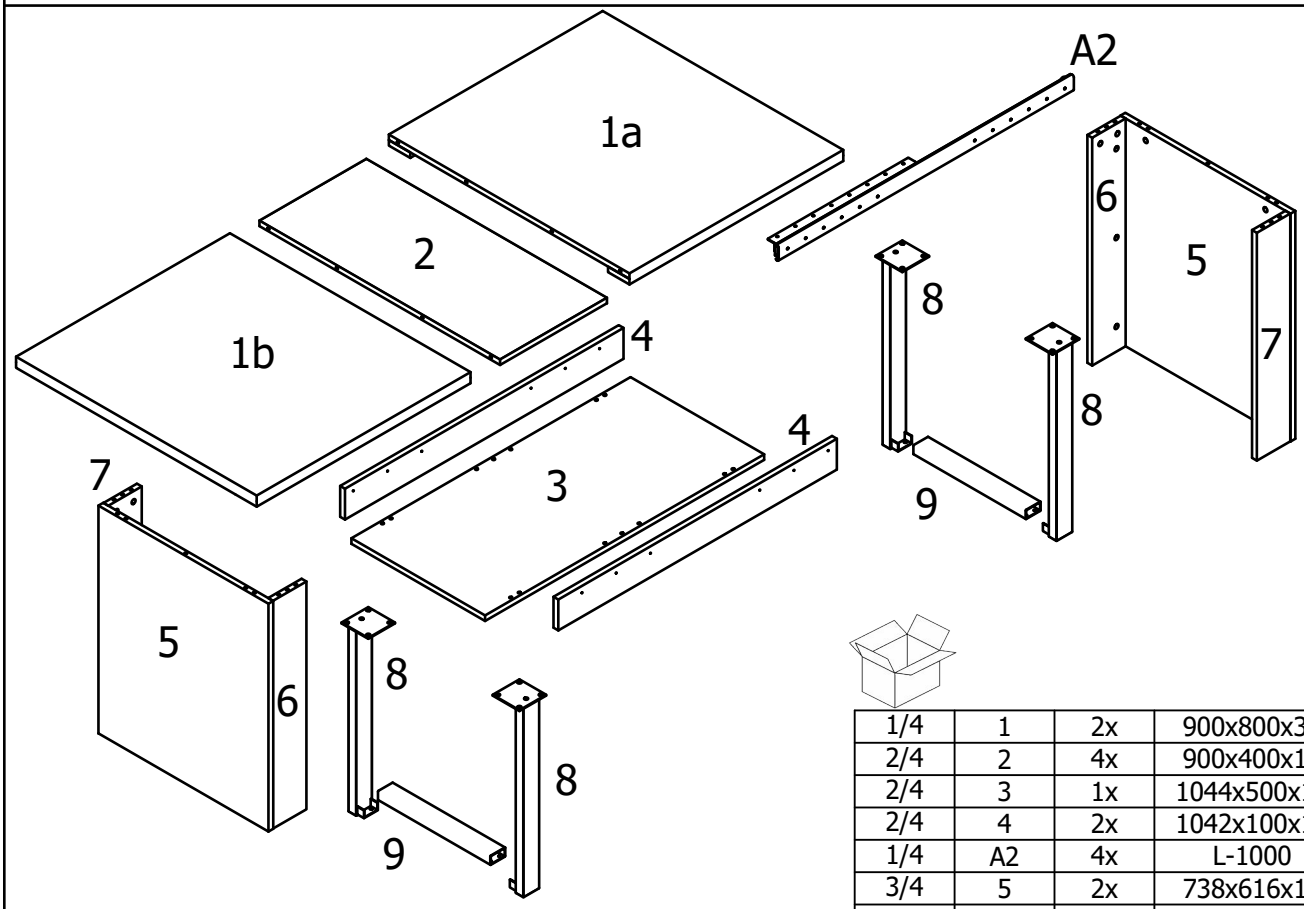

1/4	1	2x	900x800x36
2/4	2	4x	900x400x18
2/4	3	1x	1044x500x18
2/4	4	2x	1042x100x18
1/4	A2	4x	L-1000
3/4	5	2x	738x616x18
3/4	6	2x	738x125x18
3/4	7	2x	738x125x18
4/4	8	4x	620x60x30
4/4	9	2x	420x60x30

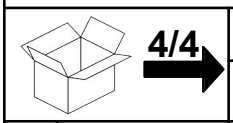

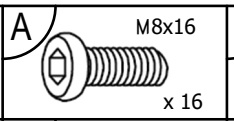

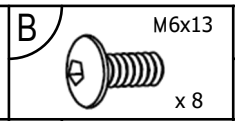

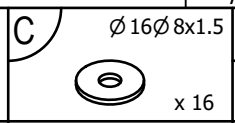

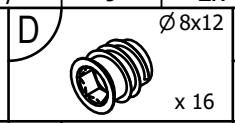

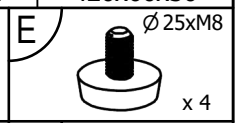

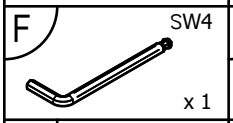

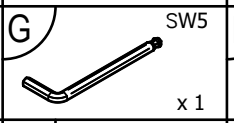

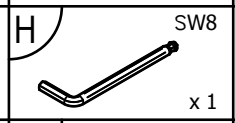

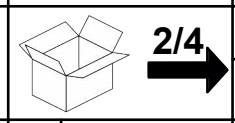

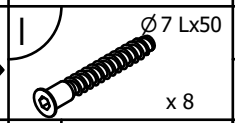

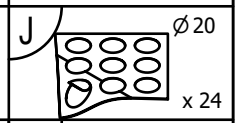

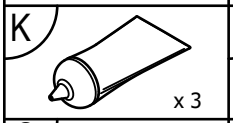

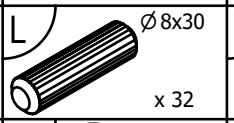

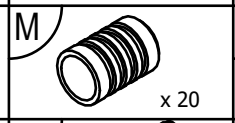

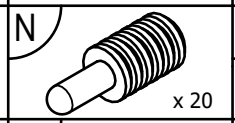

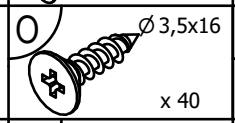

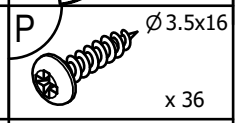

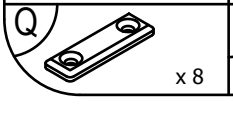

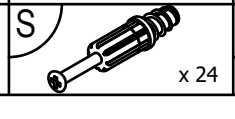

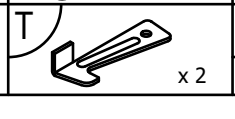

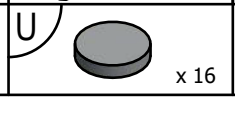

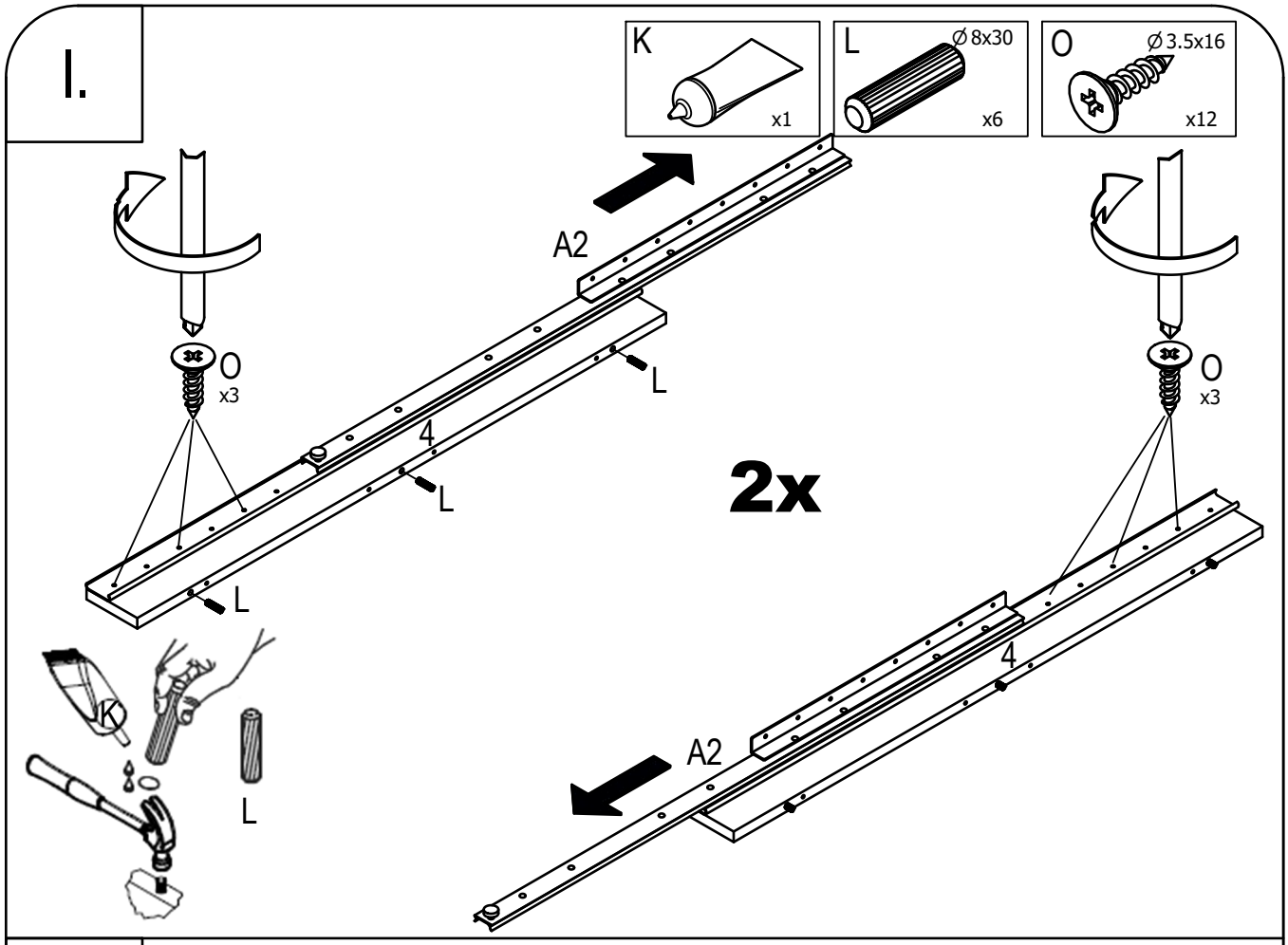
I.
K
x1
L
Ø 8x30
x6
O
Ø 3.5x16
x12
A2
O
x3
L
4
L
L
2x
O
x3
4
A2
K
L

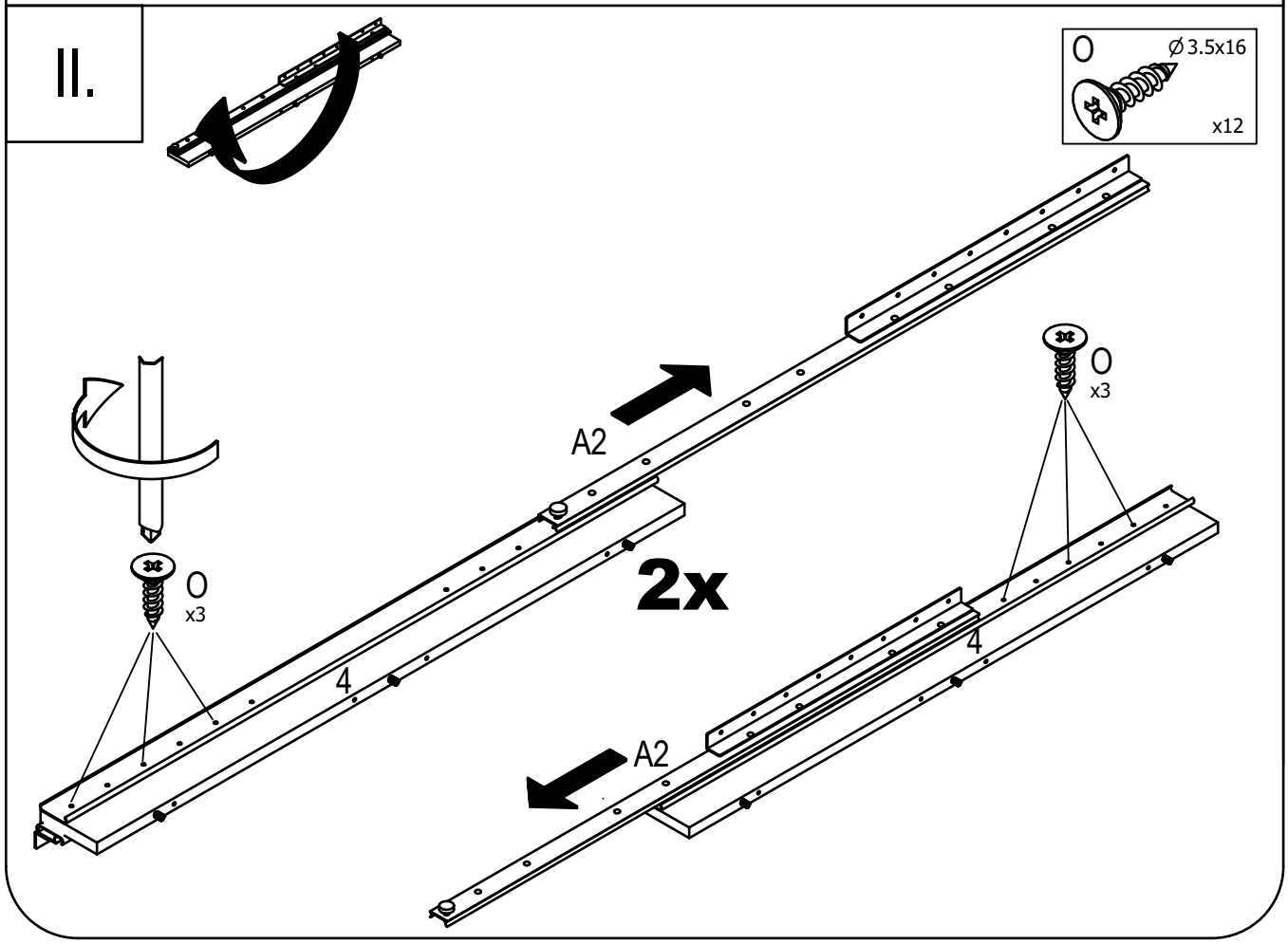
II.
O
Ø 3.5x16
x12
A2
O
x3
2x
4
O
x3
4
A2

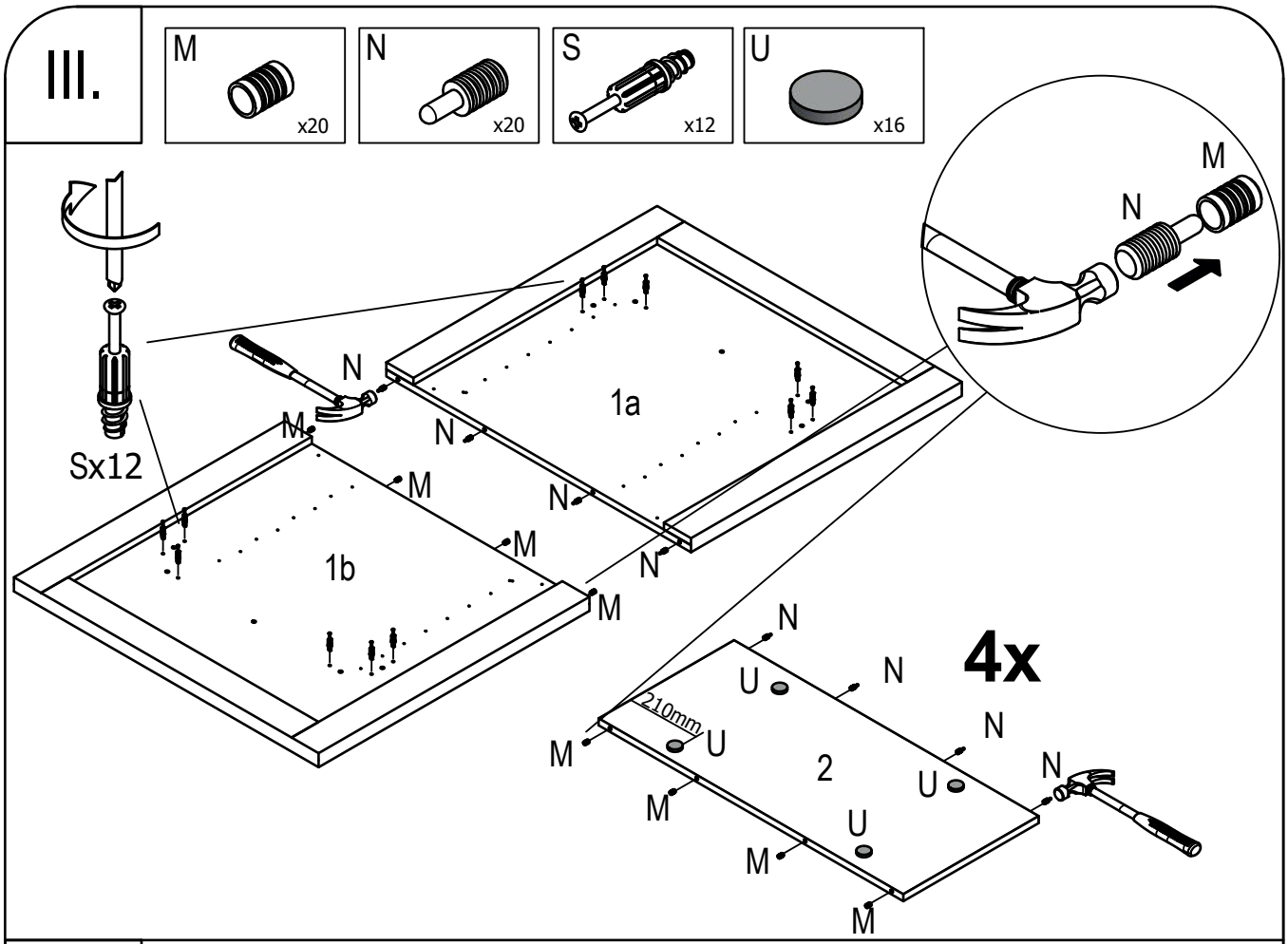
III.
M
x20
N
x20
S
x12
U
x16
Sx12
1a
1b
2
4x
210mm

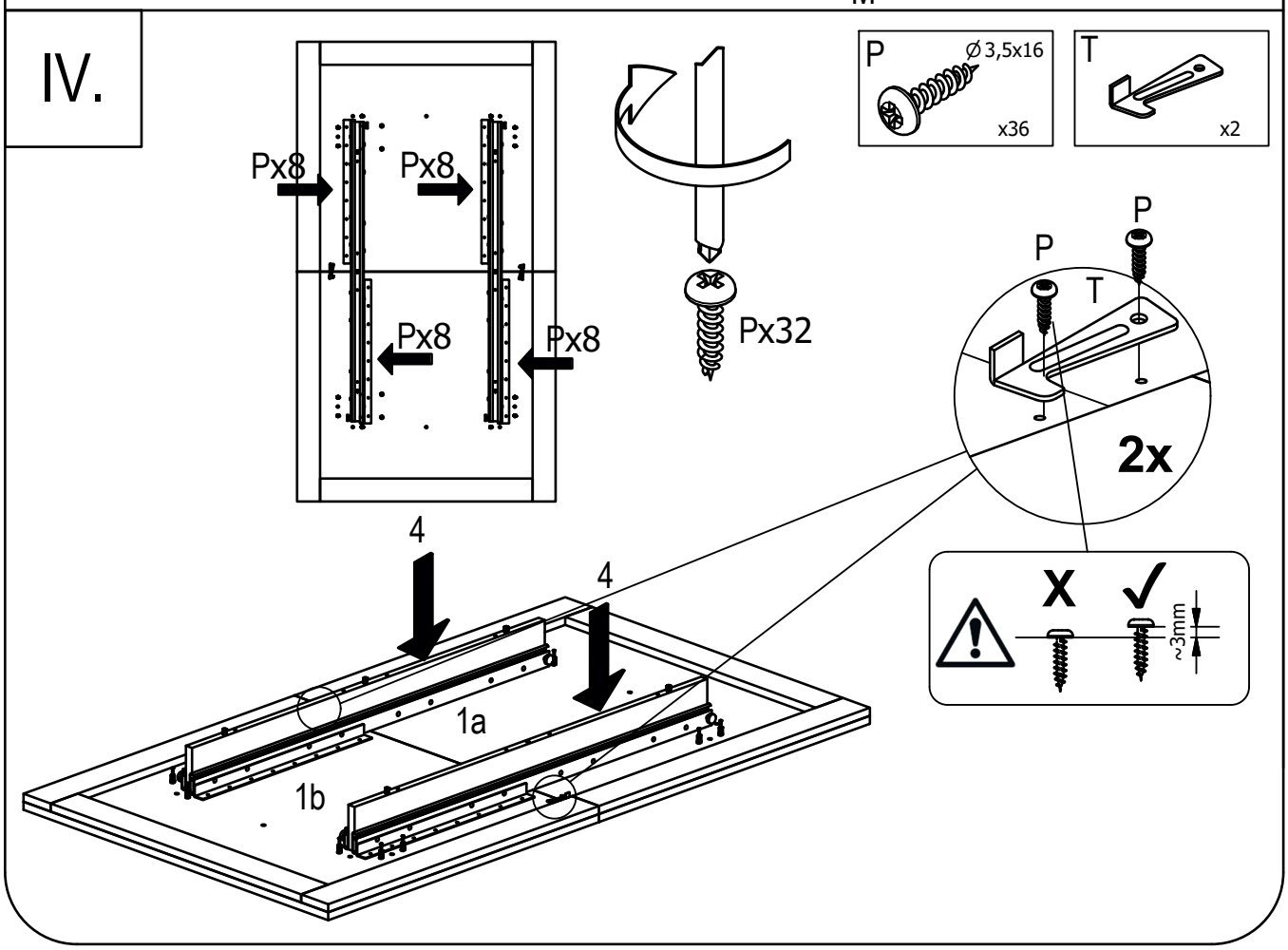
IV.
P
Ø3,5x16
x36
T
x2
Px8
Px32
2x
4
1a
1b
X
~3mm

V.

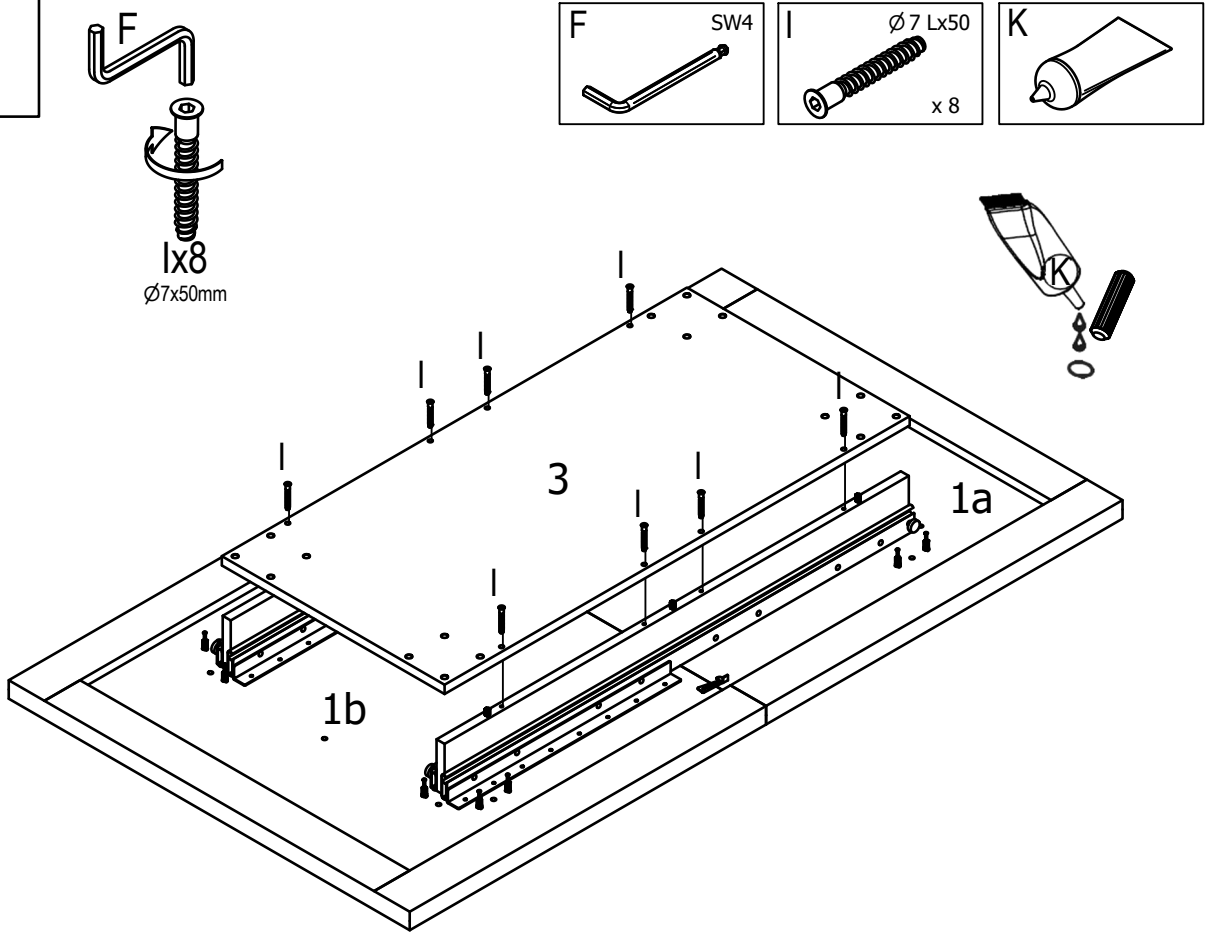
F
SW4
I
Ø 7 Lx50
x 8
K
F
Ix8
Ø7x50mm
JK
I
3
1a
1b

VI.

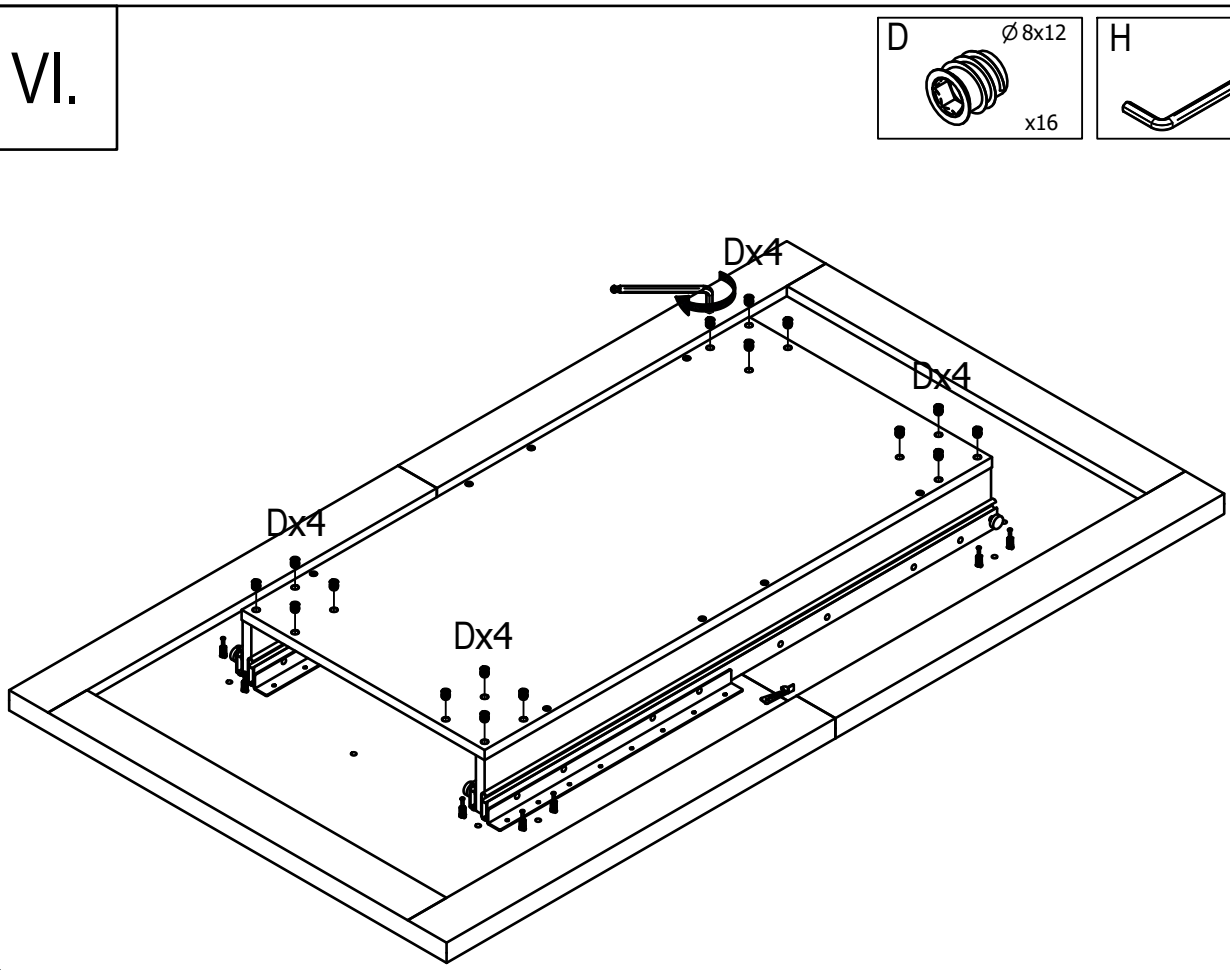
D
Ø 8x12
x16
H
SW8
x1
Dx4
Dx4
Dx4
Dx4

VII.

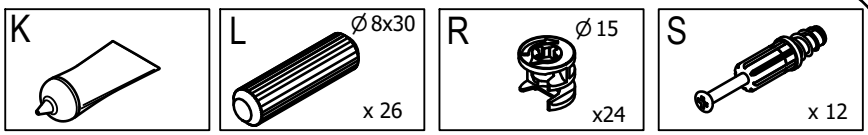

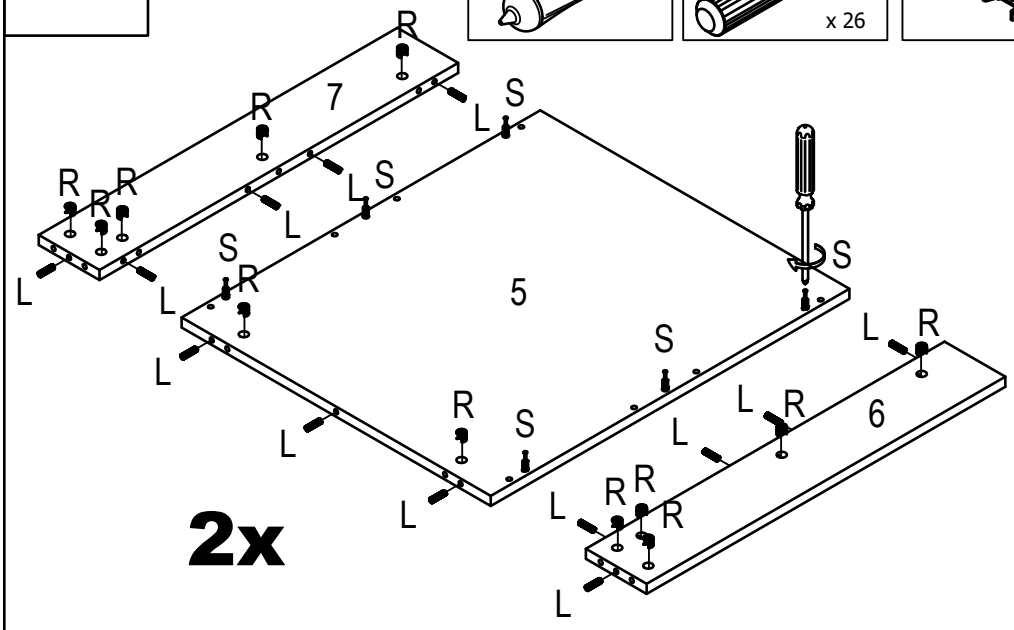

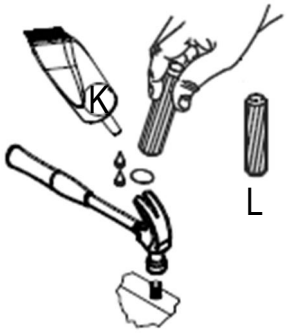

VIII.

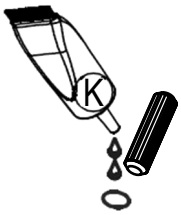

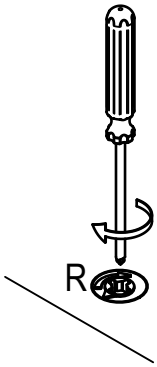

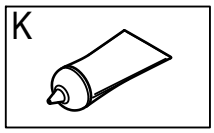

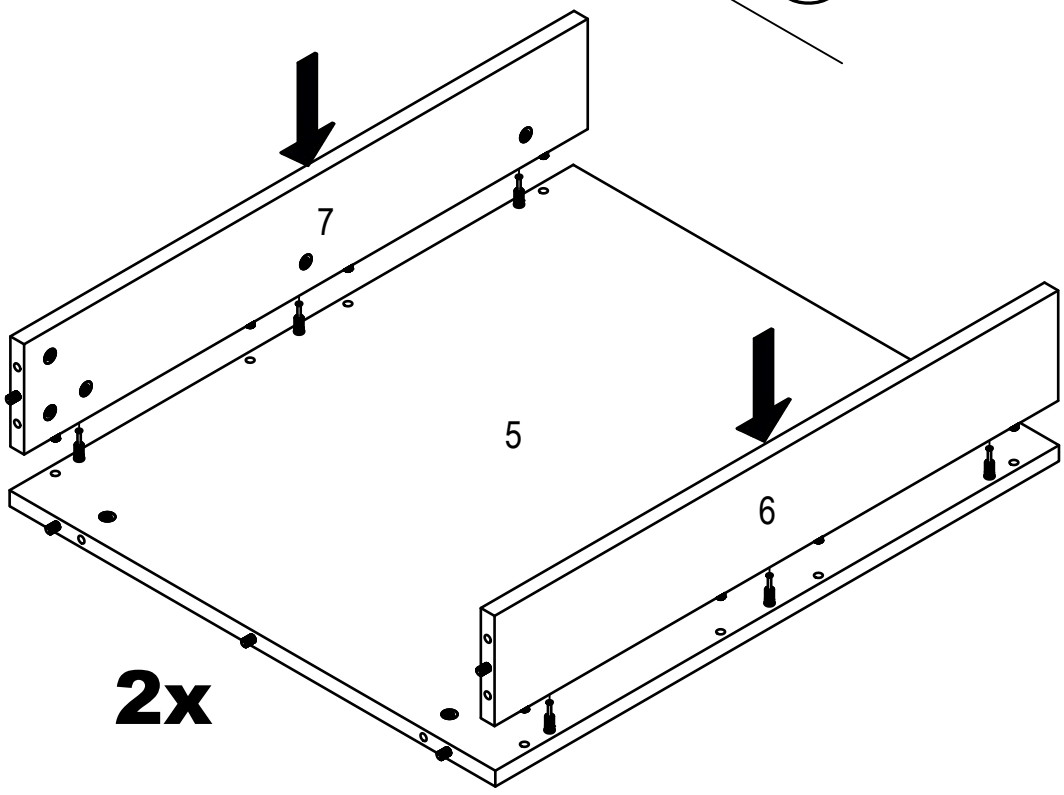

IX.

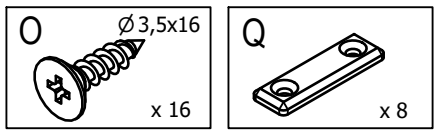

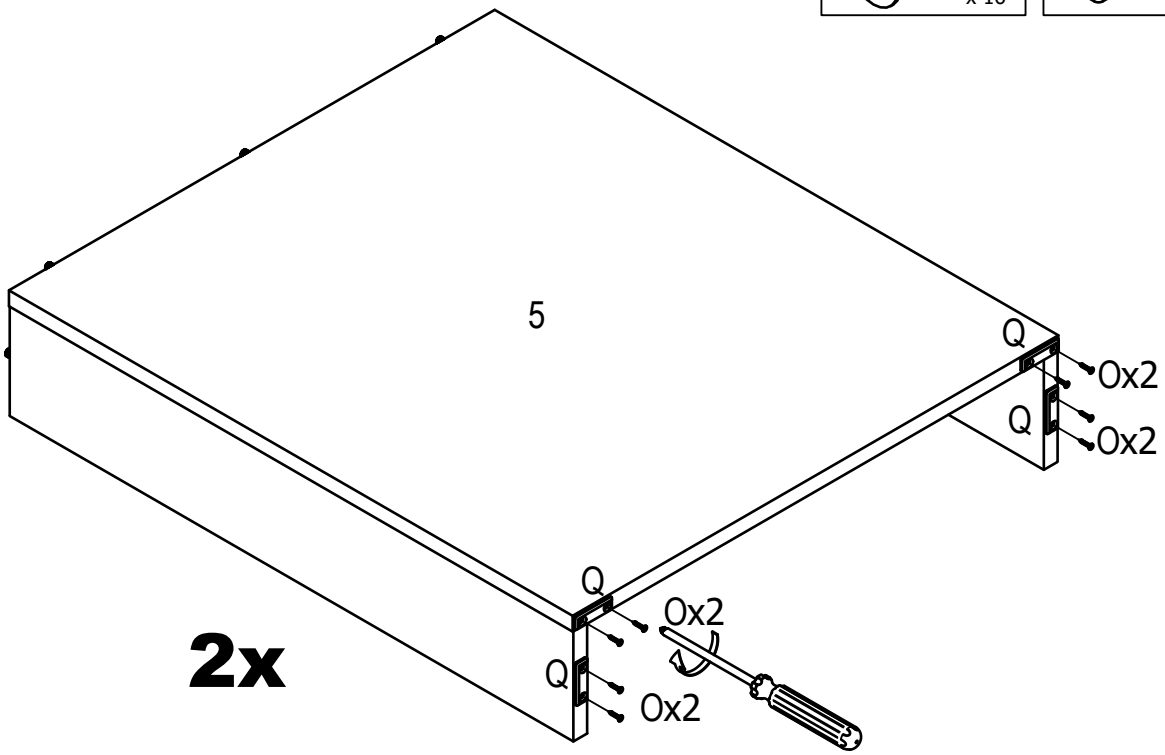

X.

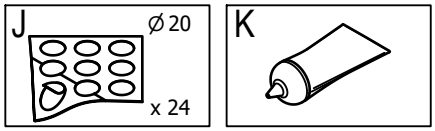

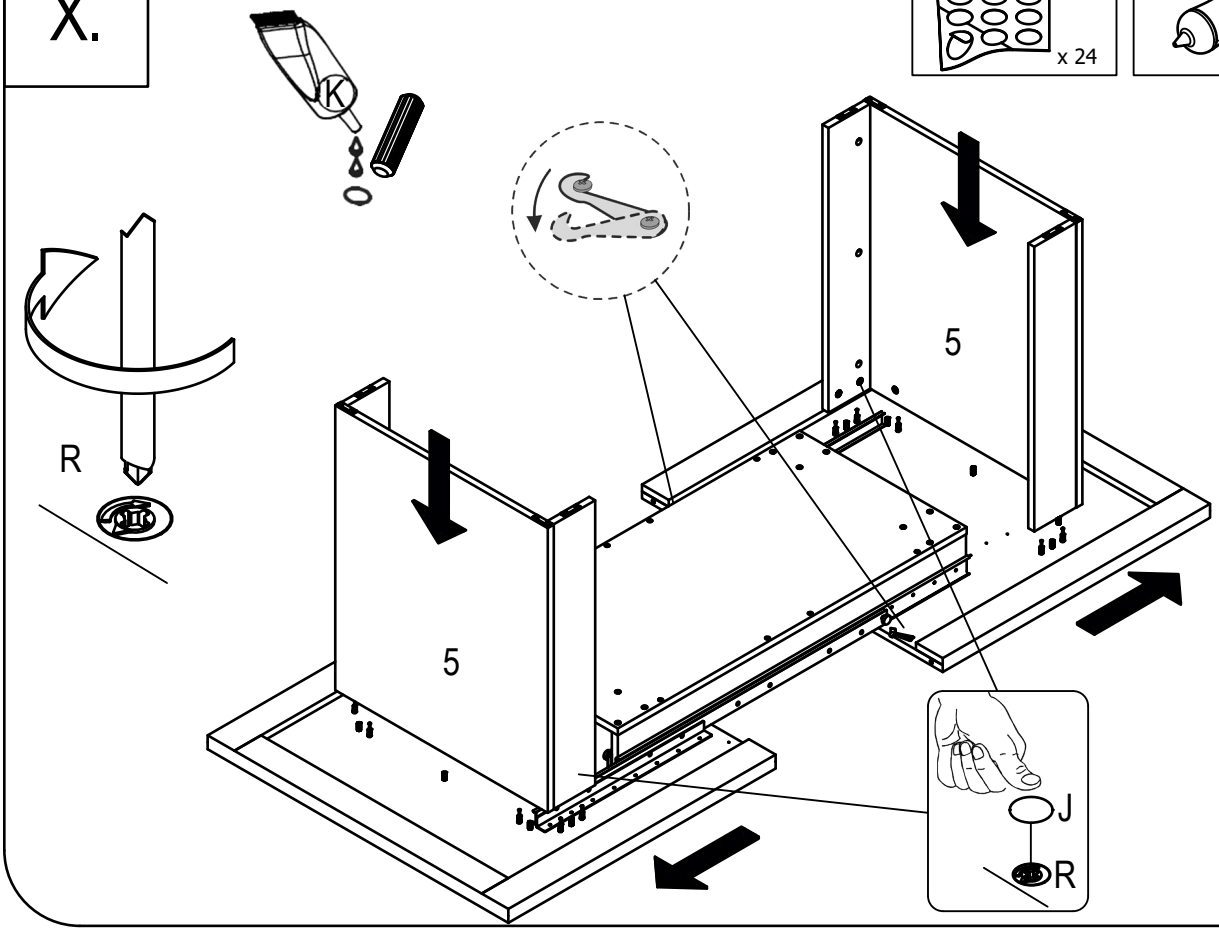

XI.

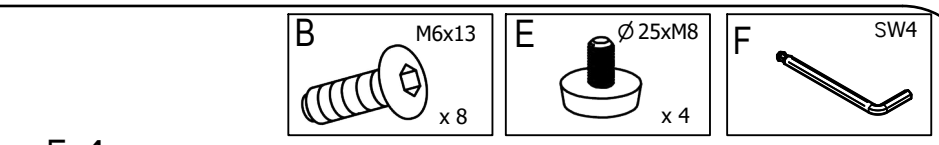
B
M6x13
x 8
E
Ø 25xM8
x 4
F
SW4

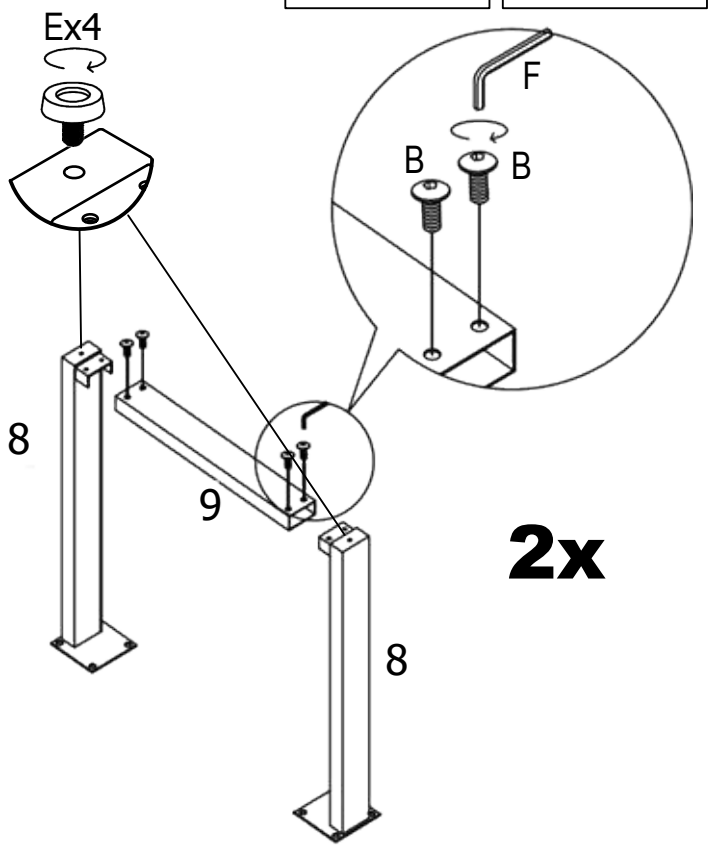
Ex4
F
B
B
8
9
8
2x

XII.

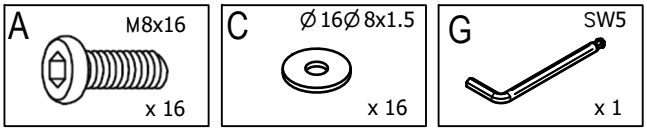
A
M8x16
x 16
C
Ø 16Ø 8x1.5
x 16
G
SW5
x 1

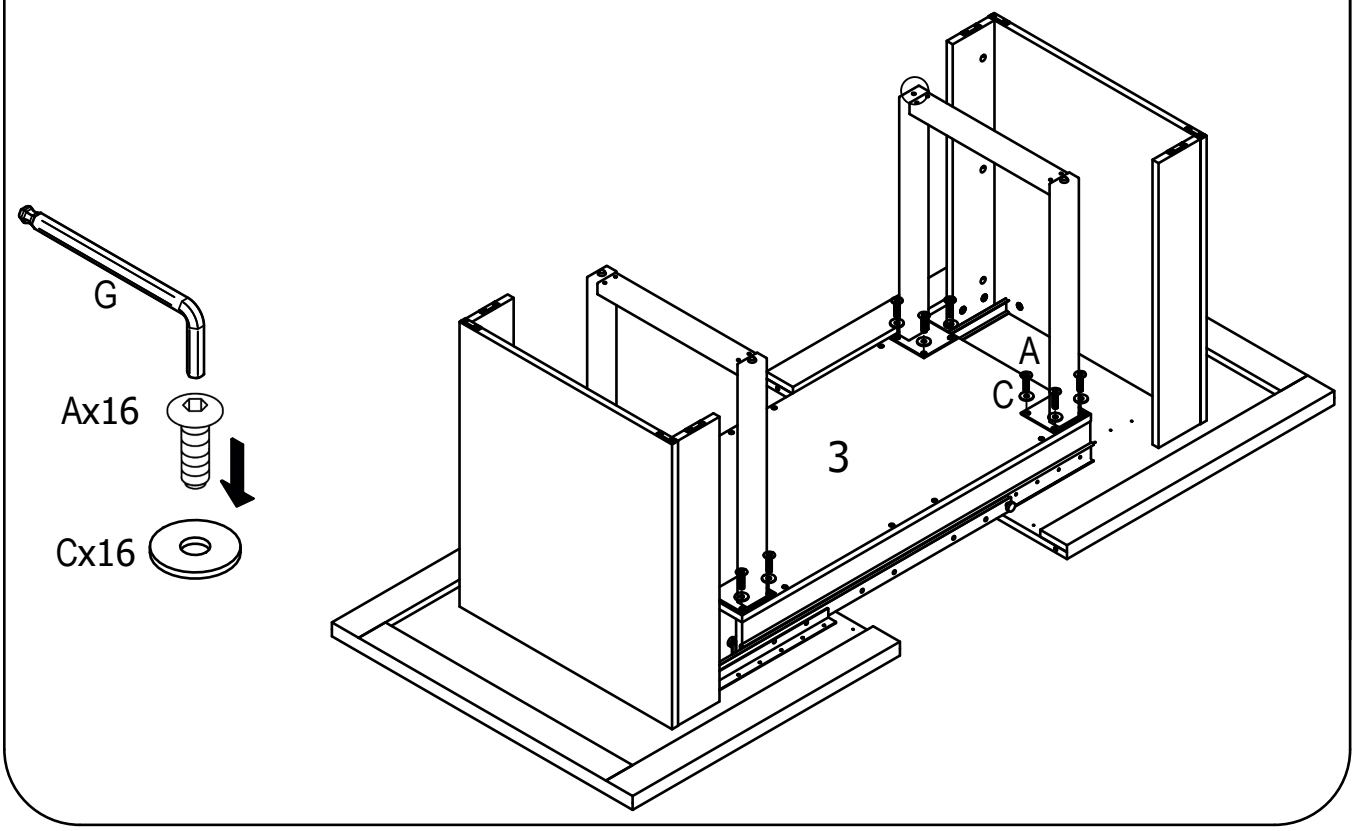
G
Ax16
Cx16
A
C
3

XIII.

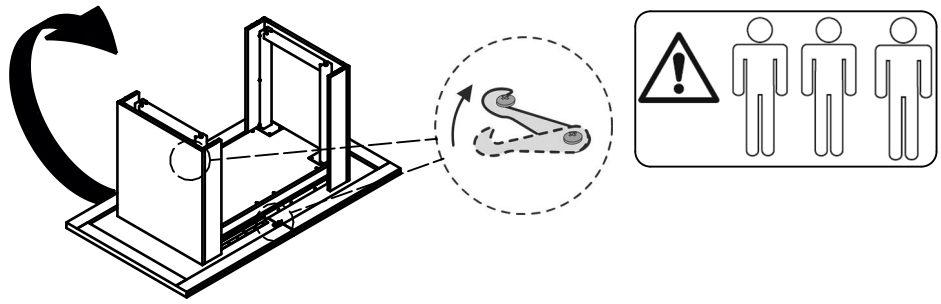

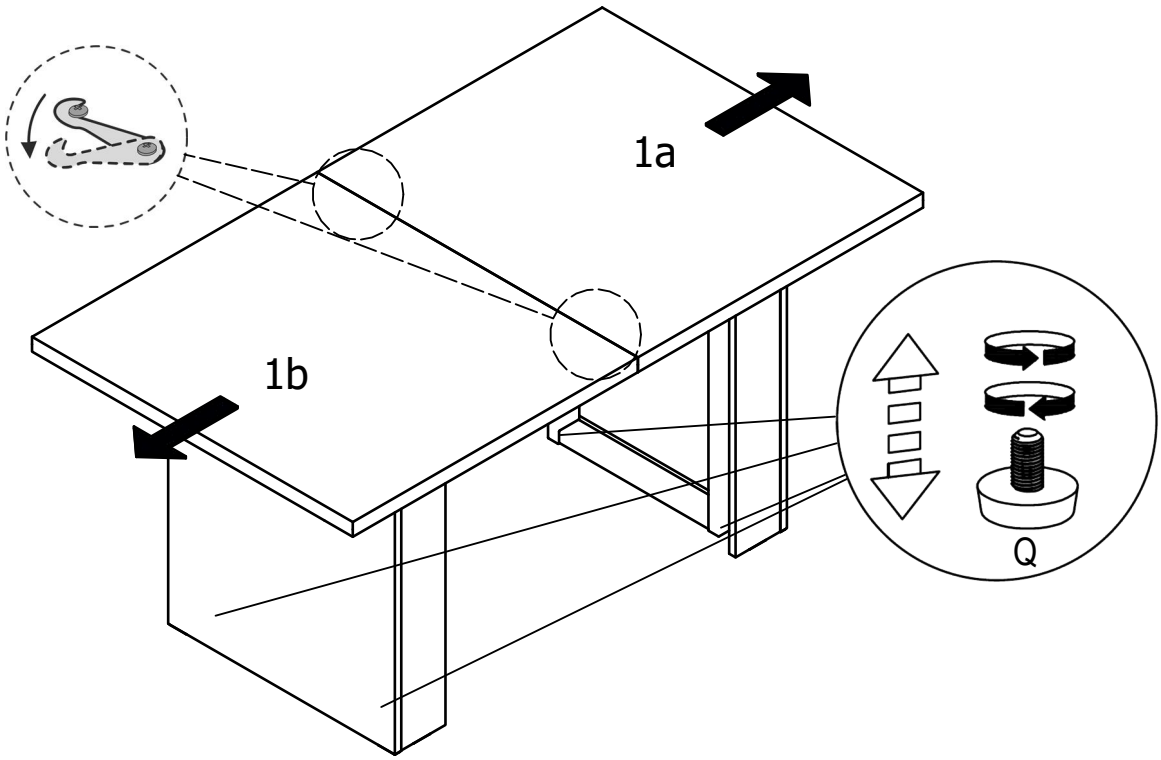

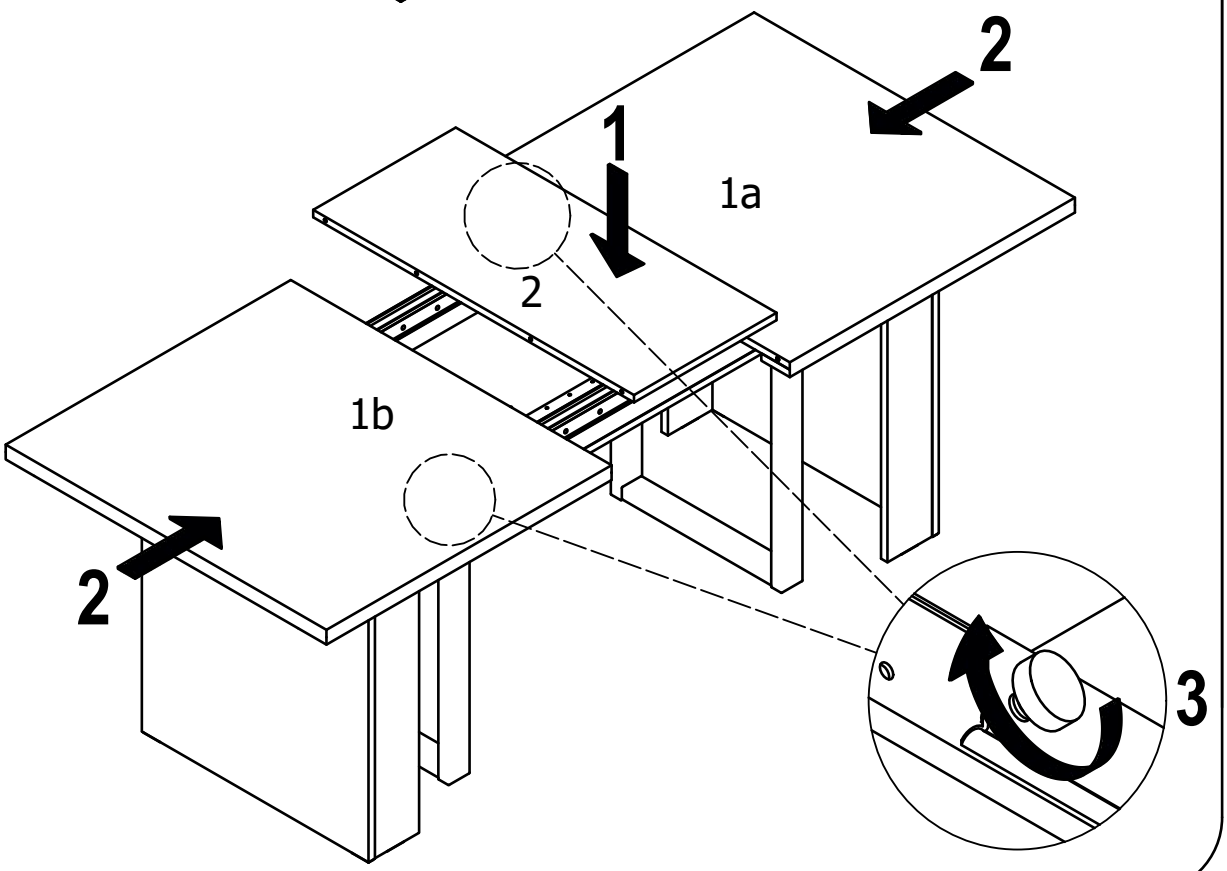

XIV.

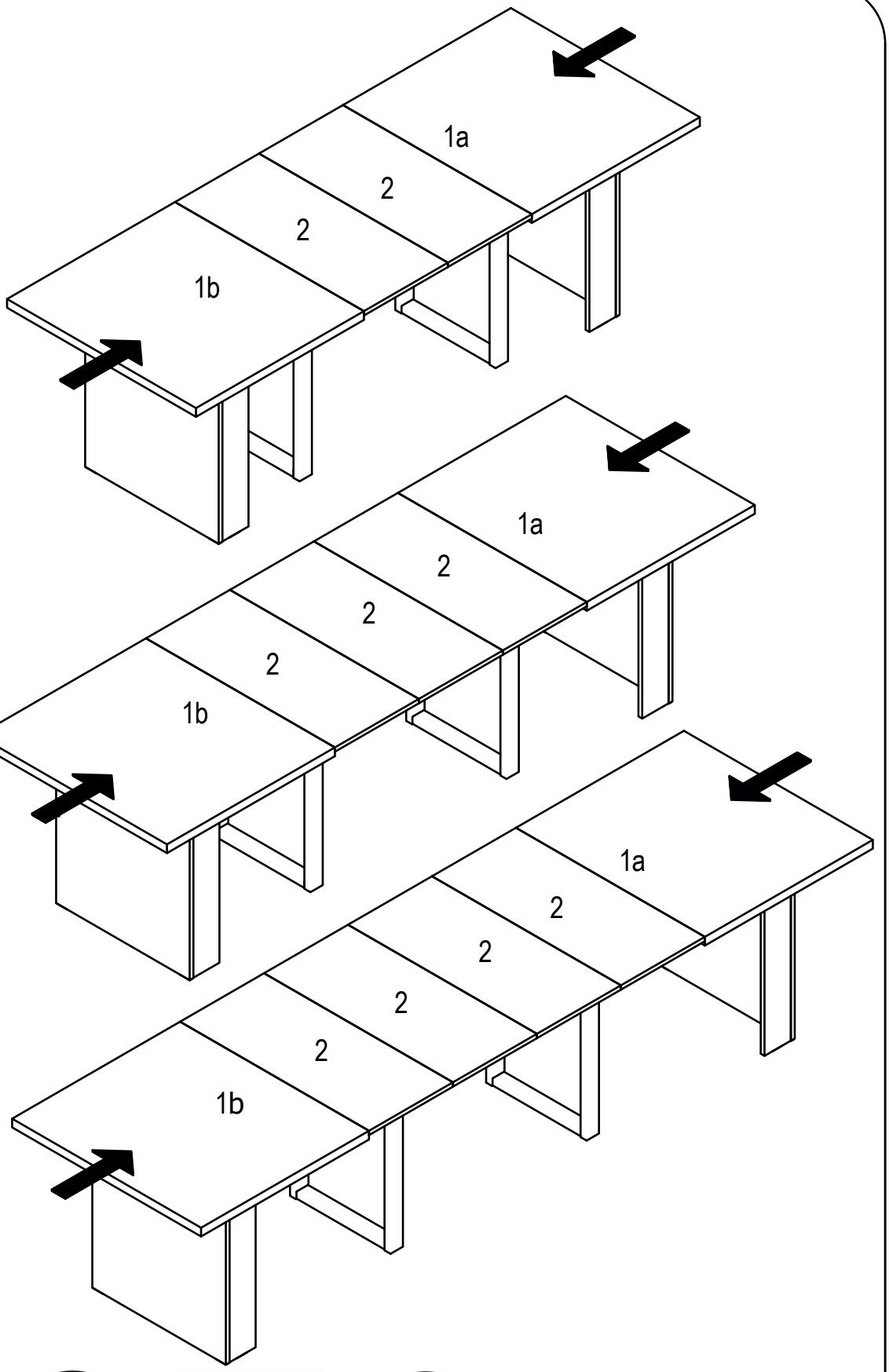
1a
2
2
1b
1a
2
2
2
1b
1a
2
2
2
2
1b

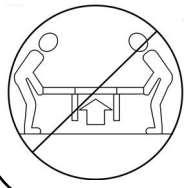

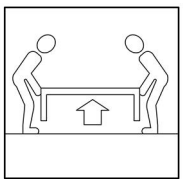

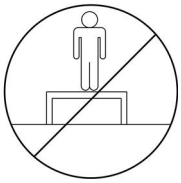

LE TRI
FACILE
BAC
DE
TRI
Séparez les éléments avant de trier