5102234/00

A ×5	B ×2	C ×4	D ×1	E ×4
		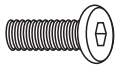		
Φ8×18mm	M8×45mm	M8×18mm	M5	

1

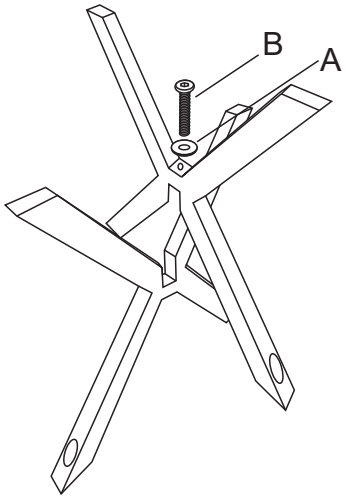

2

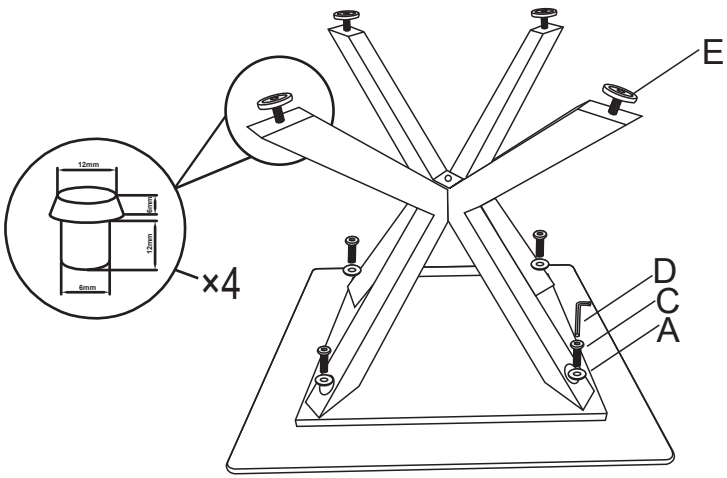
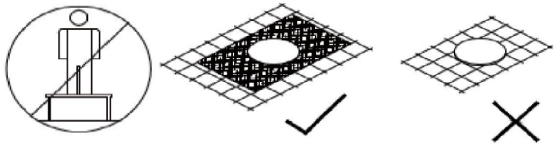
3