# COOPER II

Bettkasten / storage

120 cm
140 cm

| A-14 | B-14 | C-14 | D-14 | E-14 | F-14 | G-14 | H-14 | I-14 |
|---|---|---|---|---|---|---|---|---|
| 2 | 2 | 6 | 20 | 4 | 4 | 4 | 2 | 2 |
| 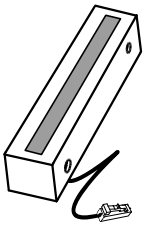 | 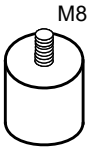  | 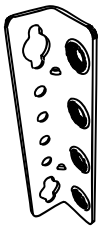 | | | | 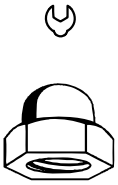 | 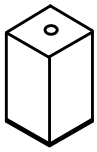 | 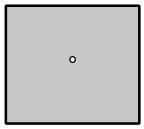 |
| H 50 \| LED | H 50 | | M6*20 | M6*25 | M6 | M6 | H 70 | 978*1164<br>978*1364 |

| J-14 | K-14 | L-14 | M-14 | N-14 | OL/OR-14 | P-14 | Q-14 | R-14 |
|---|---|---|---|---|---|---|---|---|
| 8 | 4 | 4 | 2 | 4 | 1 / 1 | 6 | 2 | 24 |
| 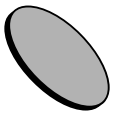 | 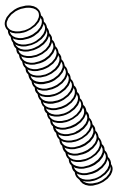 | 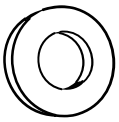 | 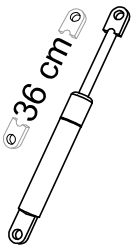  | 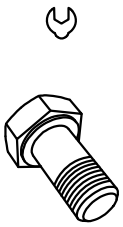 | 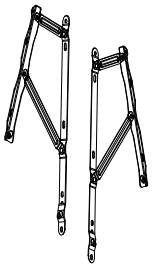 | | 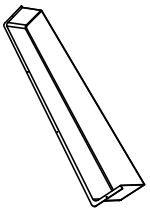 | |
| | M8*50 | M8*16 | 1200 N | M8*16 | | M8*20 | 820*95*60 | 3,5*16 |

| S-14 | T-14 | U-14 | V-14 | W-14 | X-14 | Y-14 | Z-14 | AA-14 |
|---|---|---|---|---|---|---|---|---|
| 4 | - | 1 | - | 1 / 1 | 4 | - | - | 2 |
| 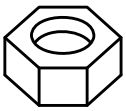 | - | 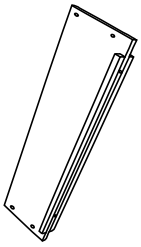 | - | 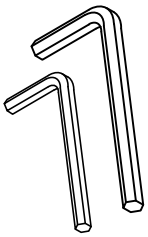 | | - | - | |
| M8 | | 1168 / 1368*<br>260 | | 4 / 5 | 4*70 | | | M6*20 |

| AB-14 | AC-14 | AD-14 | AE-14 | AF-14 | AG-14 | AH-14 | AI-14 | AJ-14 |
|---|---|---|---|---|---|---|---|---|
| 1 | 1 | 1 | 1 | 1 | - | - | - | - |
| | 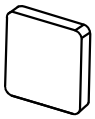 | 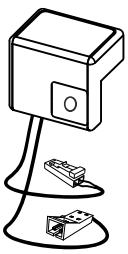 | 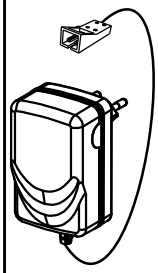 | | - | - | - | - |
| 3,5*16 | 11*11 | | 15W | | | | | |

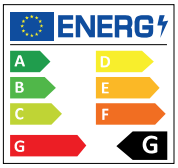


Dieses Produkt enthält eine Lichtquelle der Energieeffizienzklasse G.
This product contains a light source of energy efficiency class G.

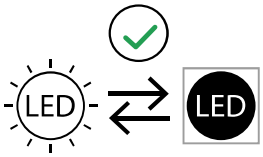


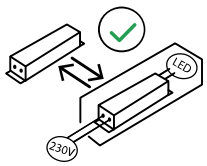

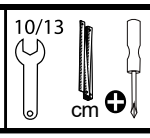

Meise Möbel GmbH & KG
Klosterbauerschafter Straße 27
D-32278 Kirchlengern

# COOPER II by meise

## Bettkasten / storage

120 cm
140 cm

1

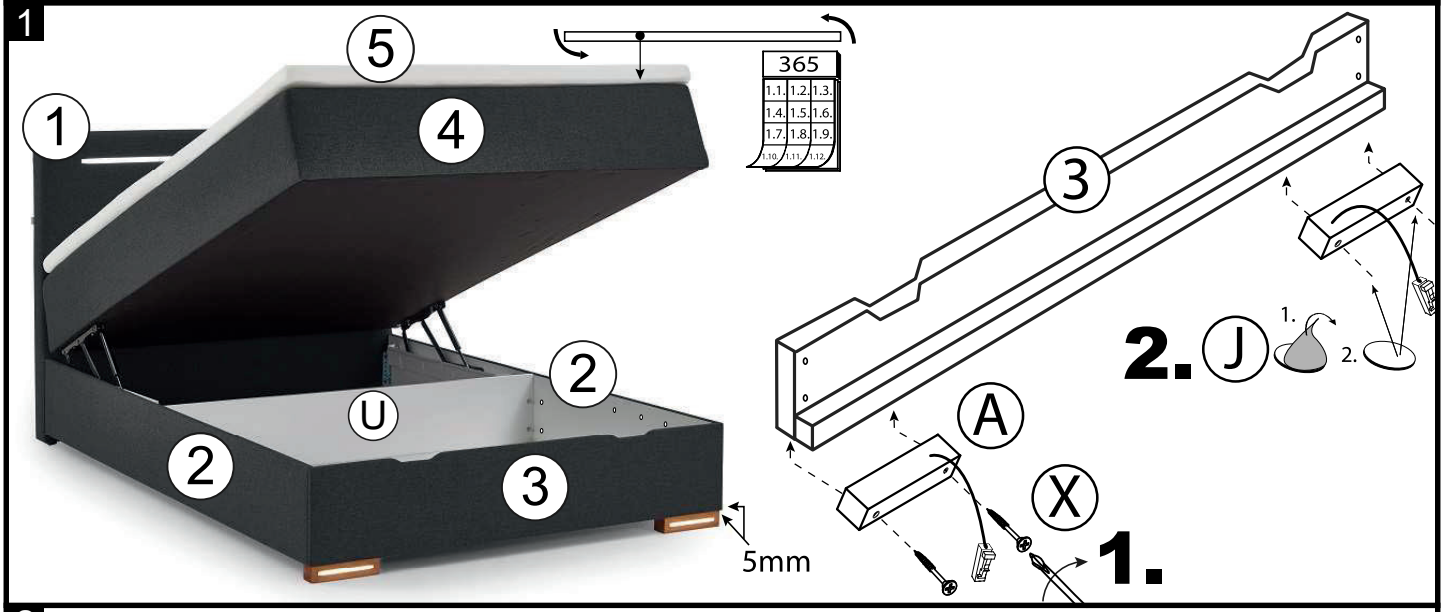


2

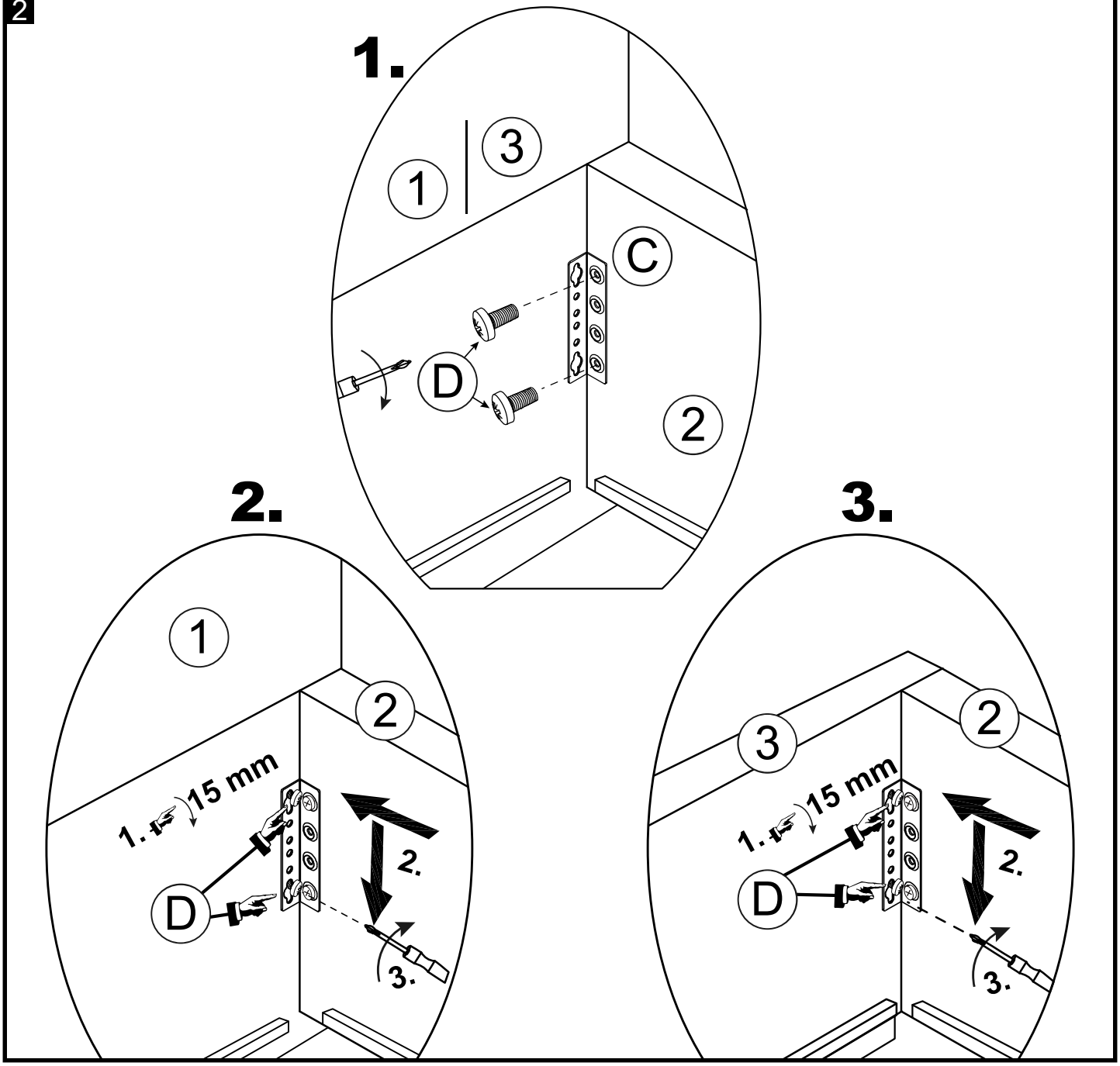

3

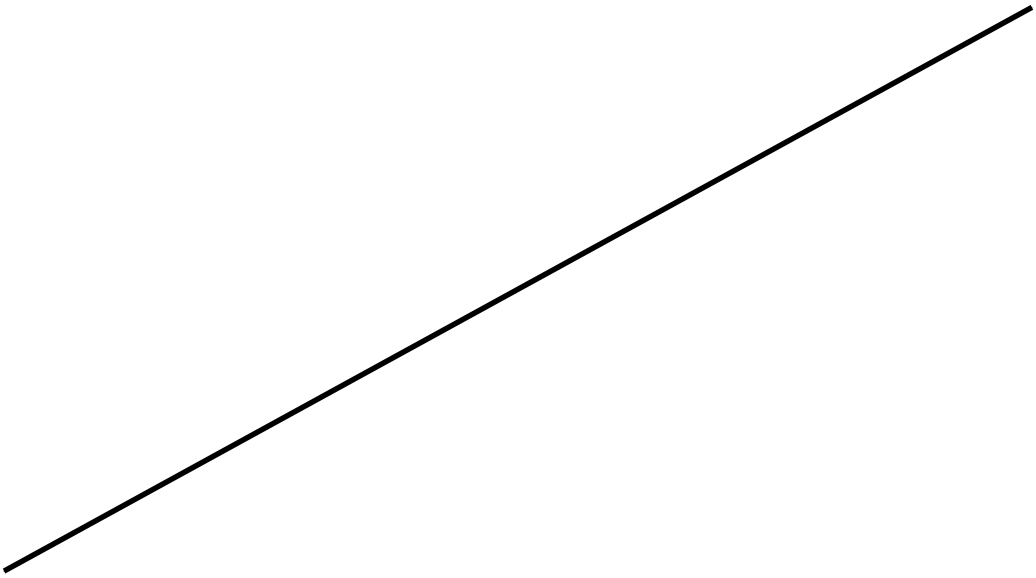

4

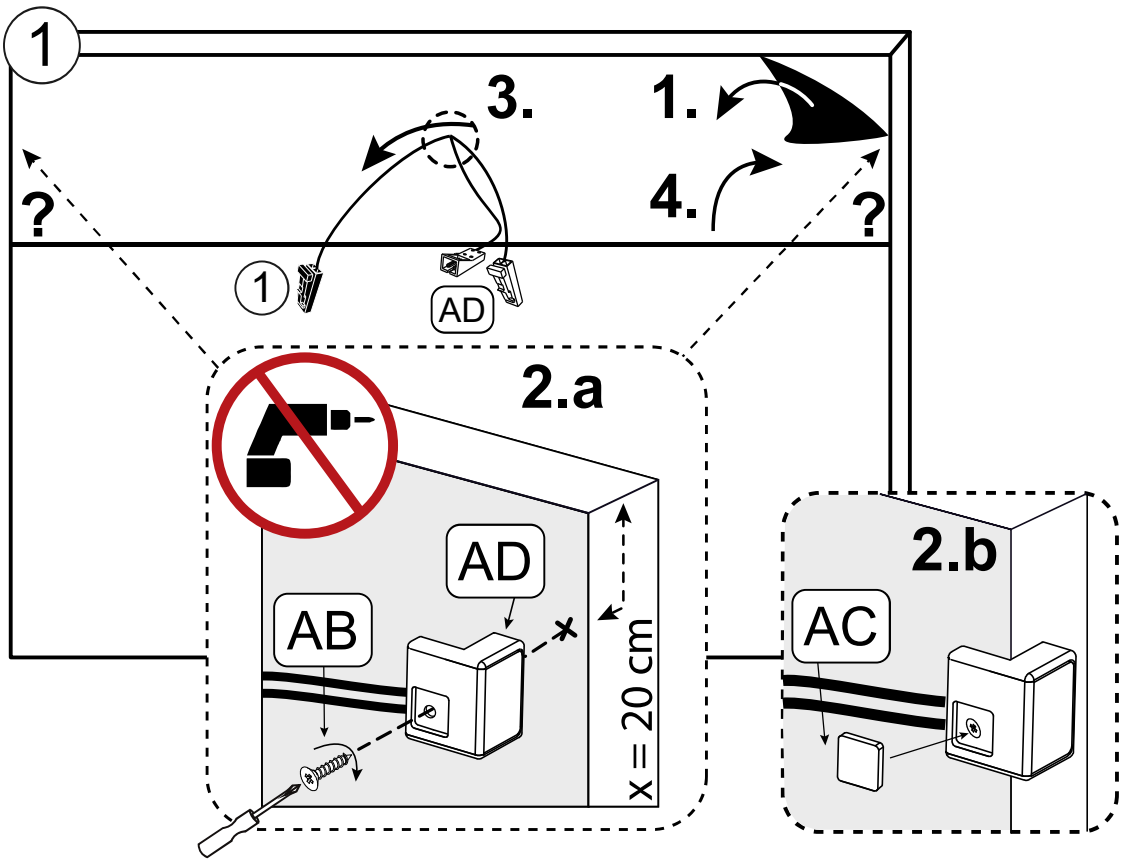

5

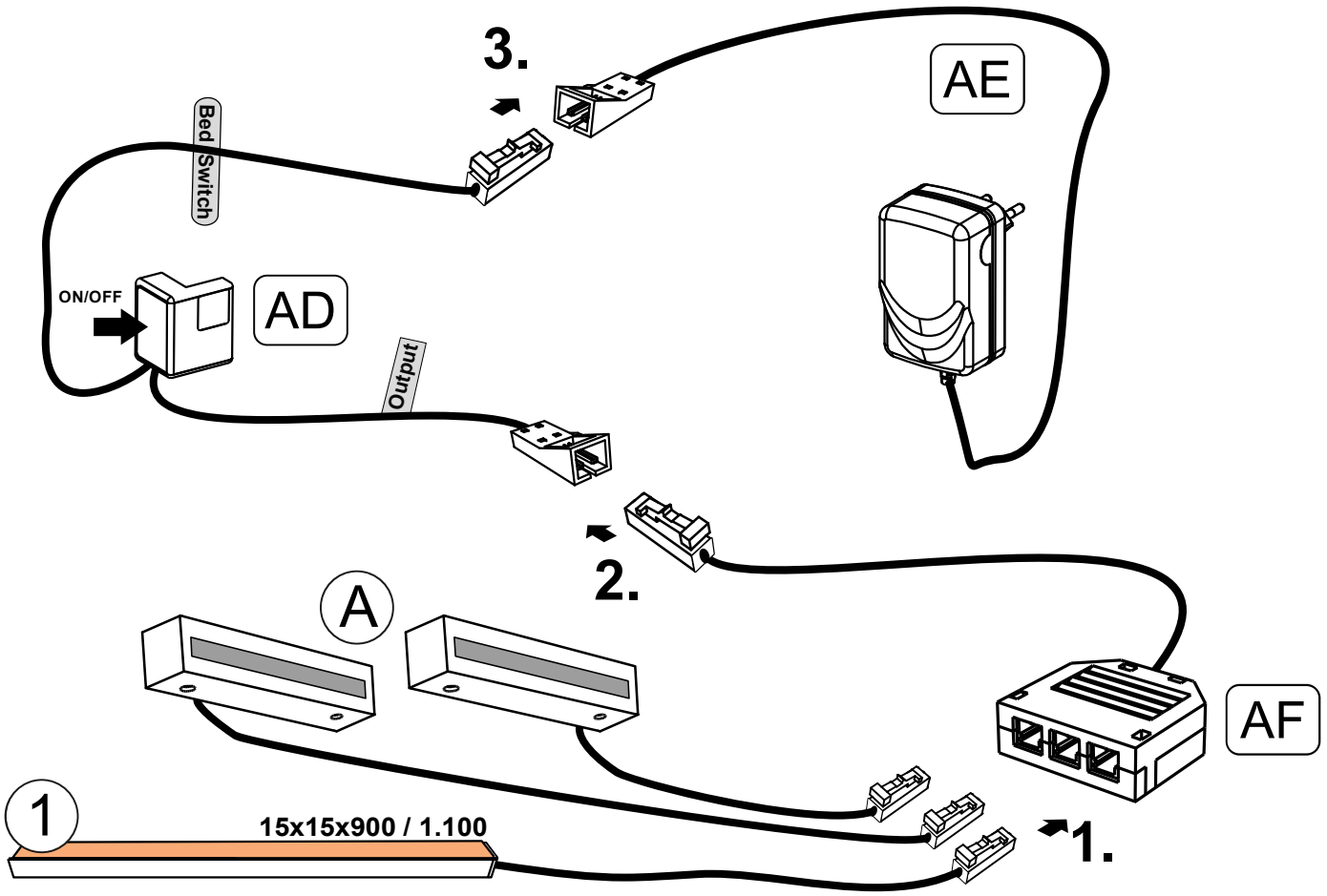
3.
AE
Bed Switch
ON/OFF
AD
Output
2.
A
AF
1
15x15x900 / 1.100
1.

6

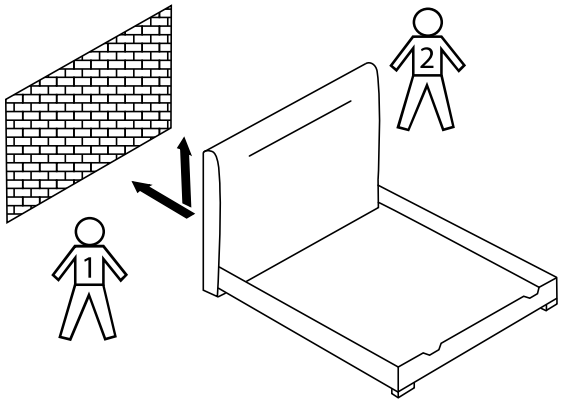
2
1

7

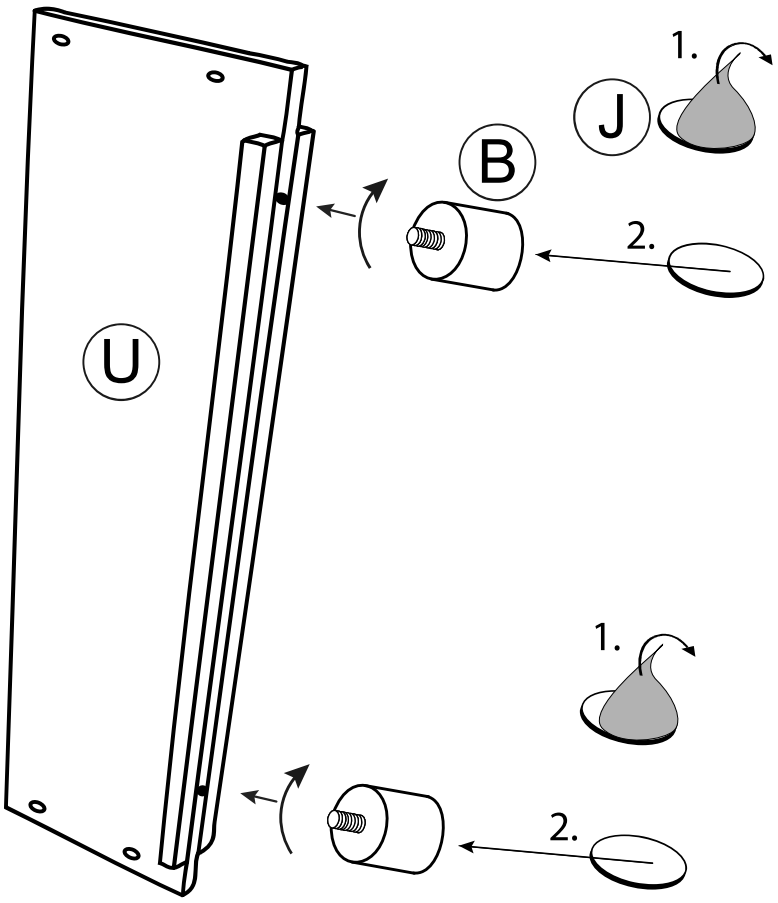
1.
J
B
2.
U
1.
2.

8

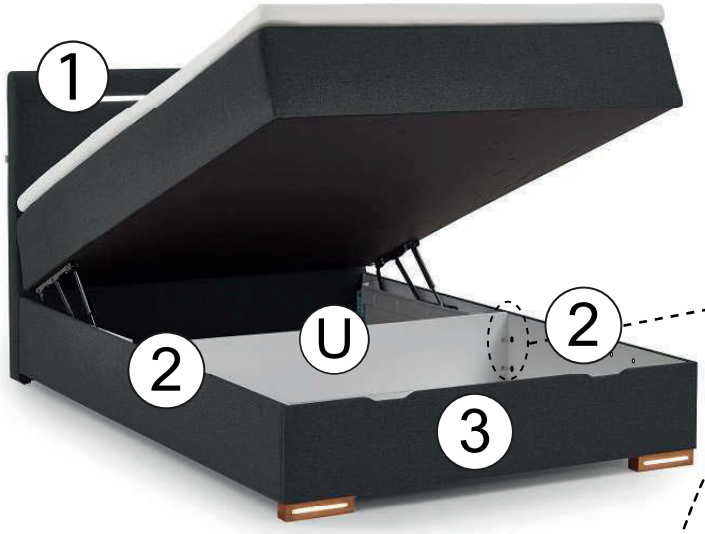


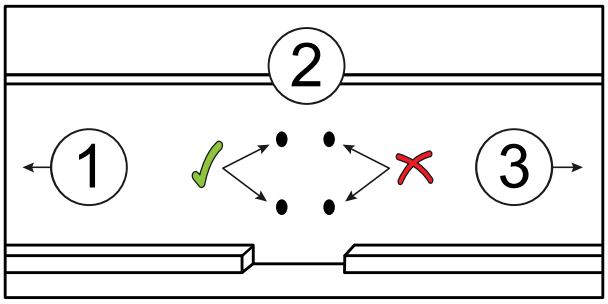


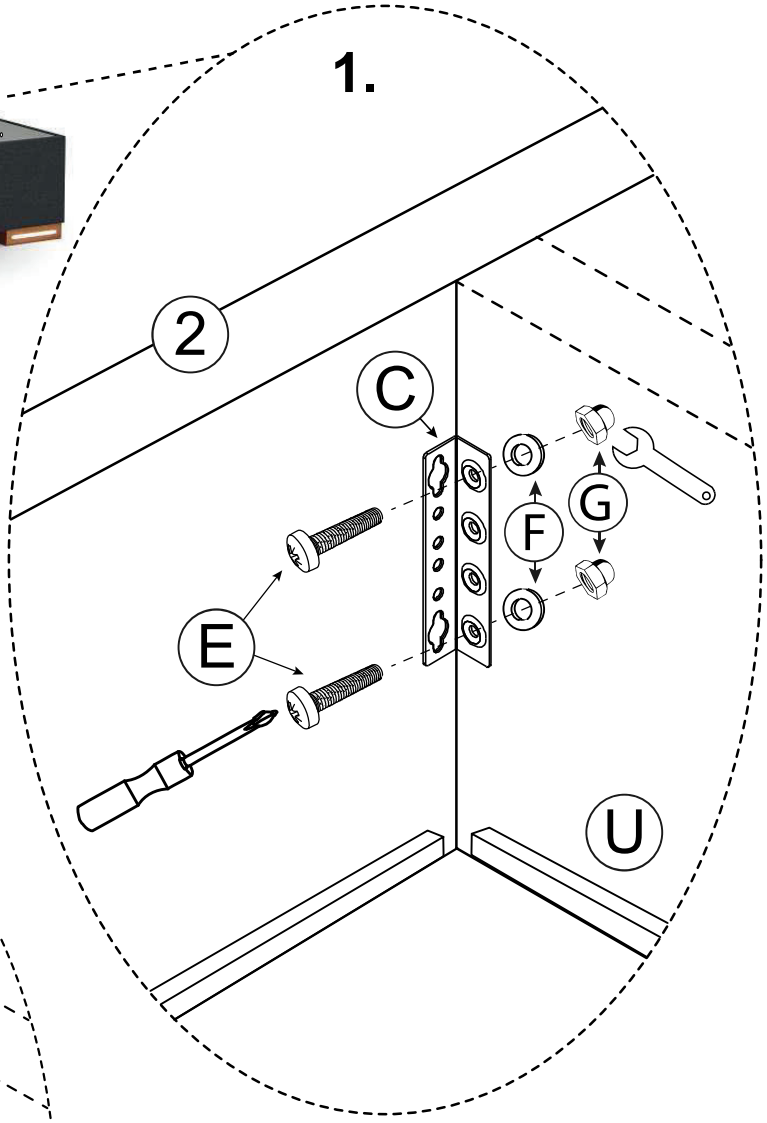


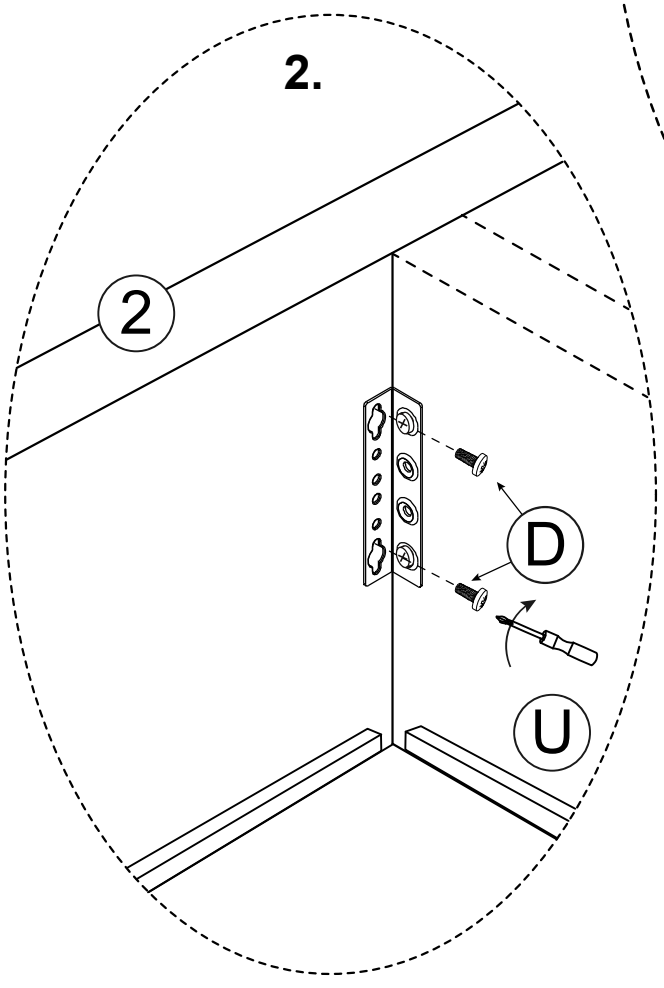

Meise Möbel GmbH & KG
Klosterbauerschafter Straße 27
D-32278 Kirchlengern

**COOPER II** by meise
Bettkasten / storage

120 cm
140 cm

9

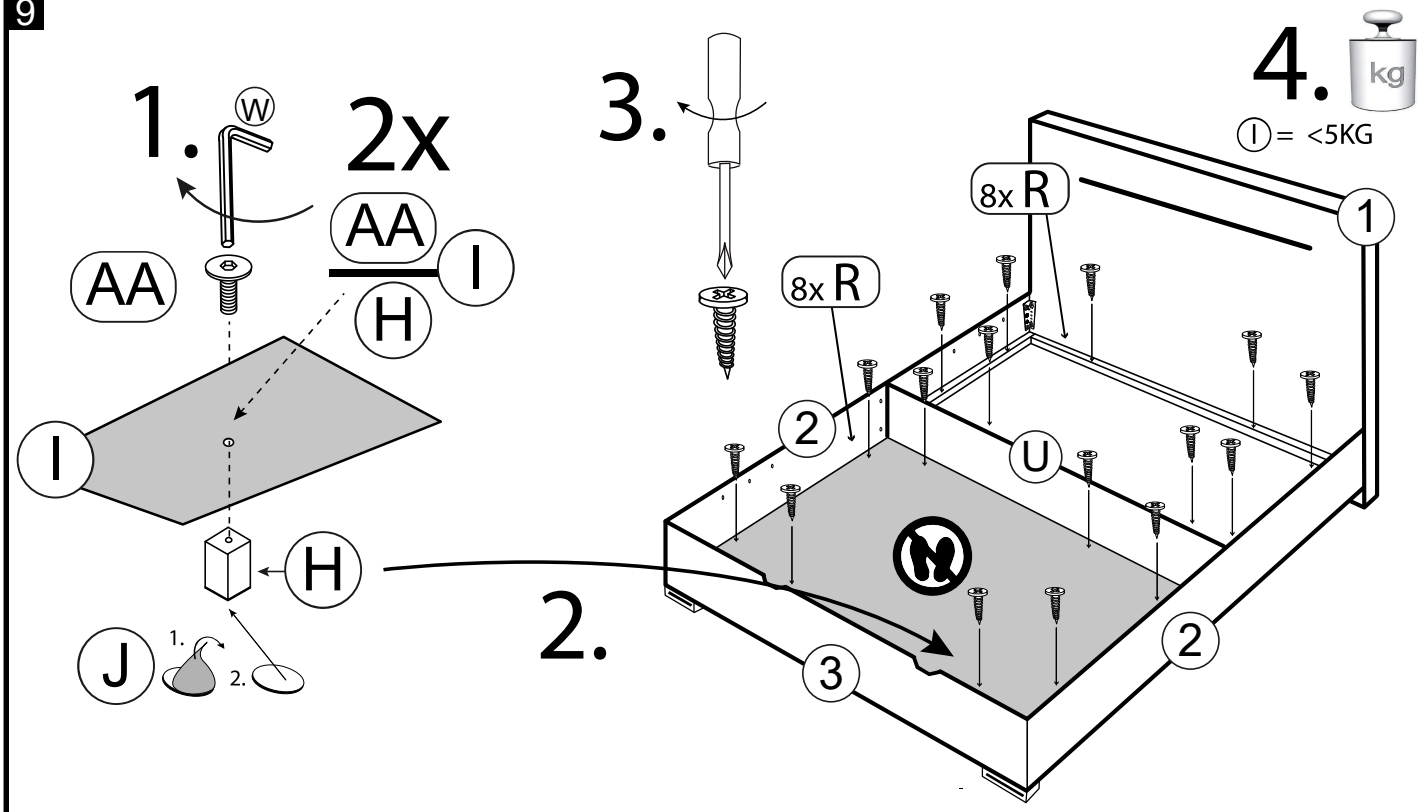


10

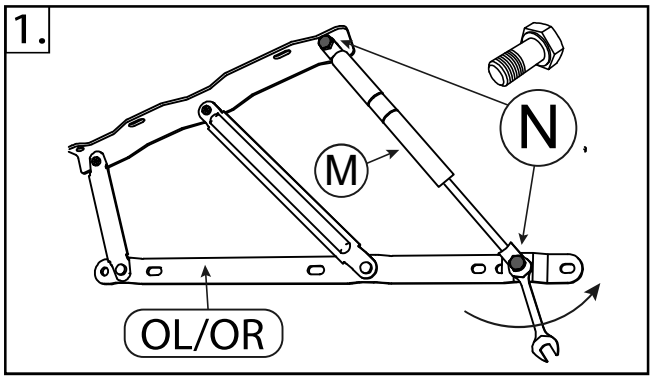


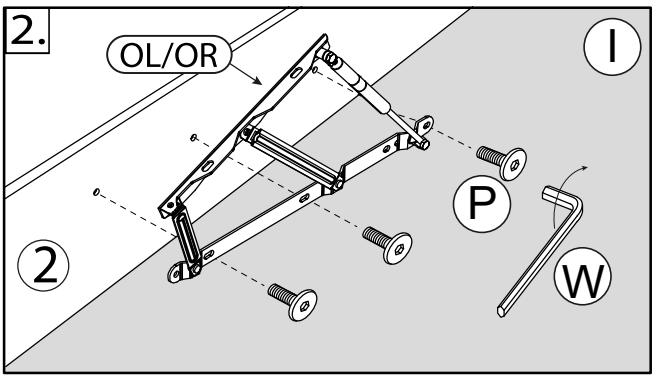


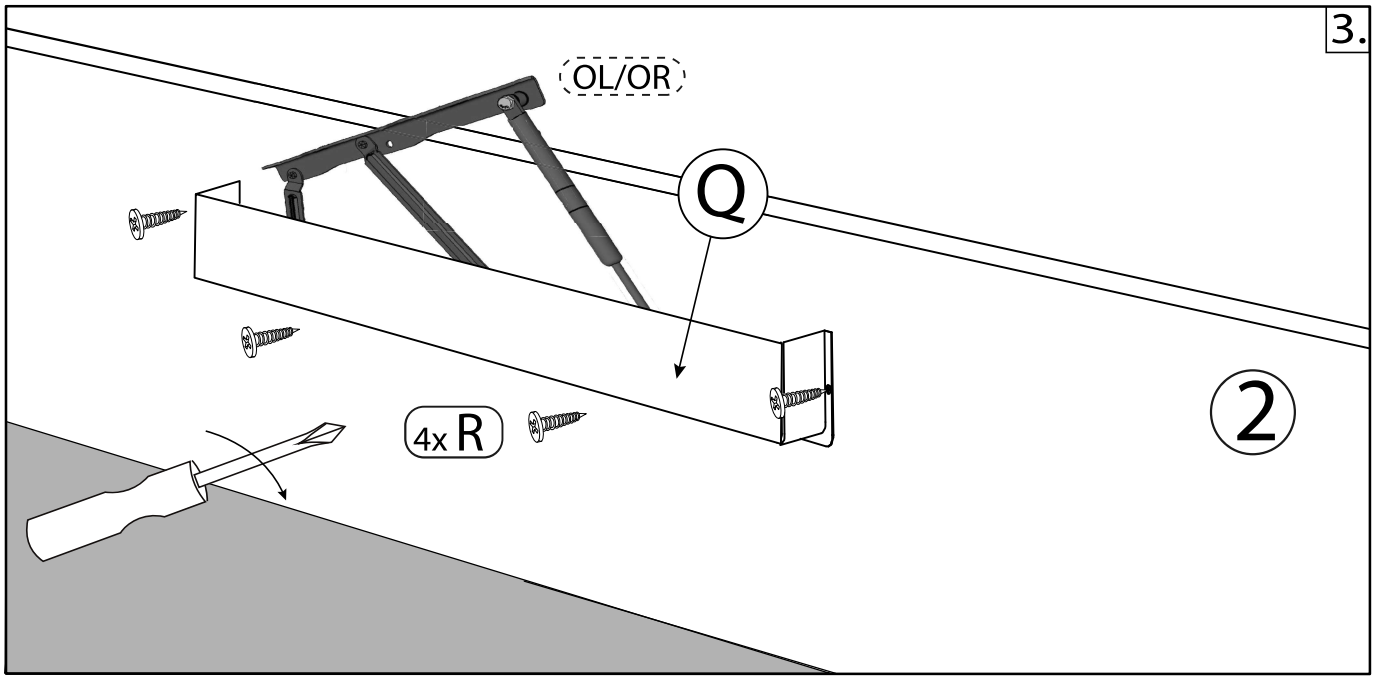

11

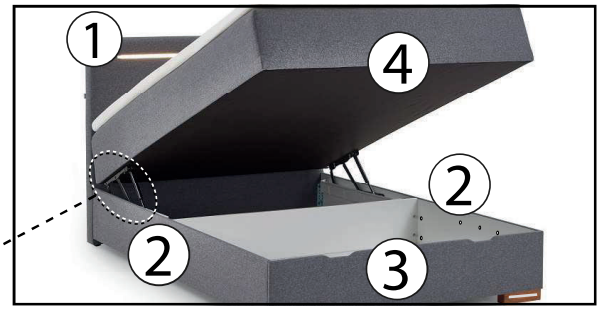


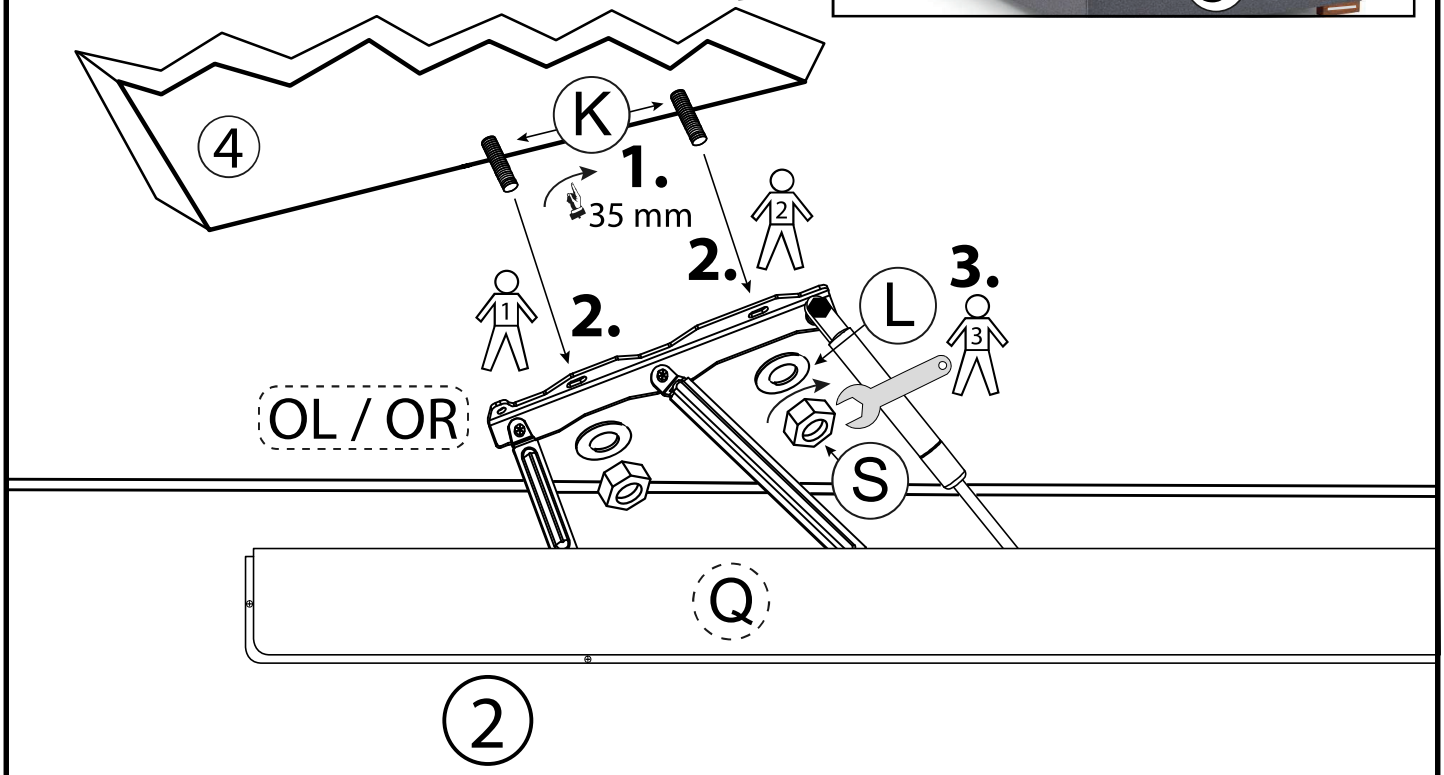


12

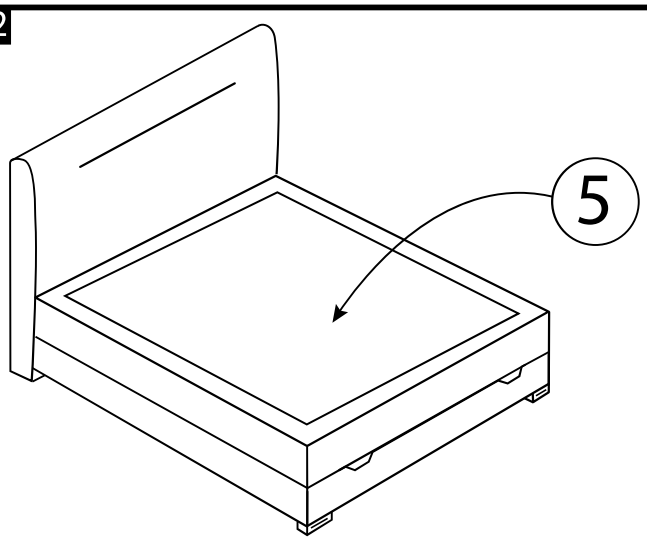


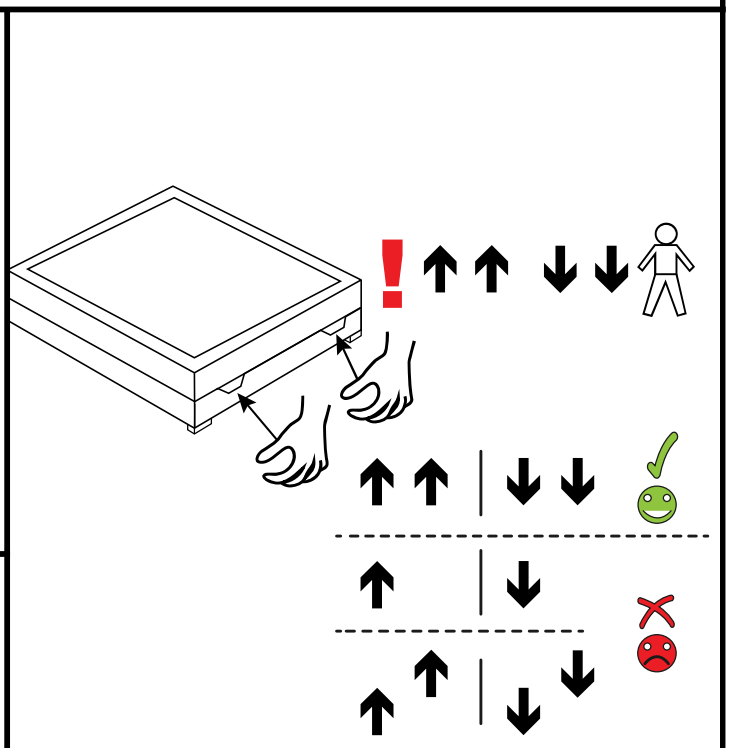

13

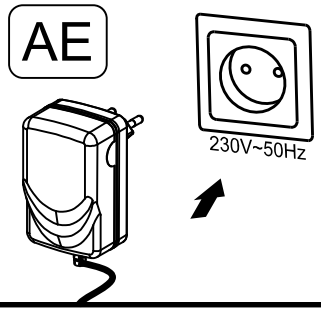

Recycling:

**1.**

**13 :**

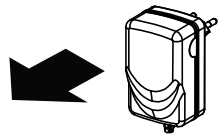
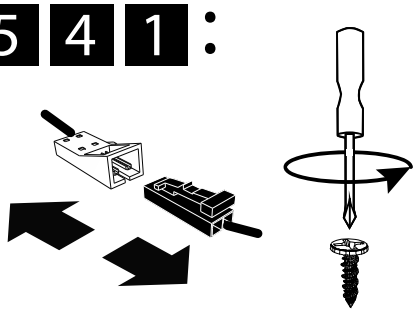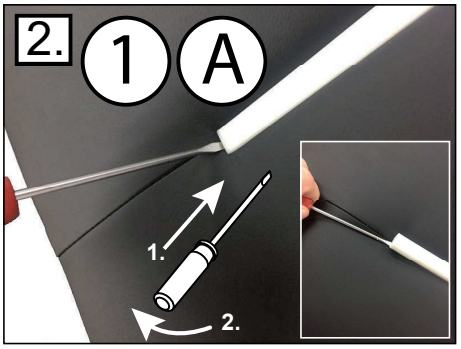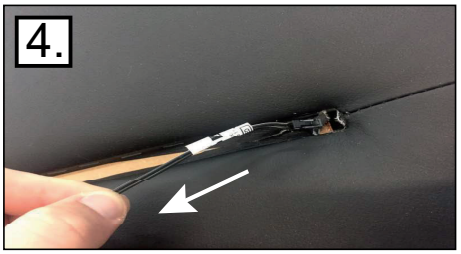
**5 4 1 :**